Extruder Motor and Injection Cylinders

Symbol Description

A131 Pressure Switch

The switch is located on the P702 filter housing. The pressure from the inlet and outlet of the filter is ported to the pressure switch. When the element becomes contaminated, a higher pressure will be developed at the inlet of the filter. Once the difference in pressure between the inlet and outlet ports reaches the switch setting, an electrical signal will be sent. The element should be changed as soon as possible after the switch indicates that the element is dirty. If this is not done and the pressure drop reaches the rating of the internal check valve spring, oil will bypass the element. The filter can also be set up to be changed on a regular basis. This schedule can be established by an oil analysis program.

A156 Directional Valve

When the solenoid is de-energized, the pressure on top of the N701 logic valve is directed to the tank. This allows the logic valve to open at 4 bar porting the pressure in the line downstream of the A188 valve back to the tank. The valve solenoid will momentarily de-energize at the completion of the following cycles: Injection at Low Volume and Pressure, Extruder Run and Clamp Decompression.

When necessary to operate extruder, injection cylinders or clamp circuit, the solenoid is energized. This directs pressure from the inlet port of the valve to the top of the logic valve. The logic valve piston will then shift closed because of the additional force of the 4 bar spring pushing downward.

If this valve fails to energize, then a low pressure condition will be indicated in the system. The valve has a manual override that can be actuated. If pressure builds when actuated then either the coil is bad, there is a bad connection in the wiring or there is no signal from the PLC. A156 is a two position, four way, 24 volt solenoid controlled, spring return, directional valve.

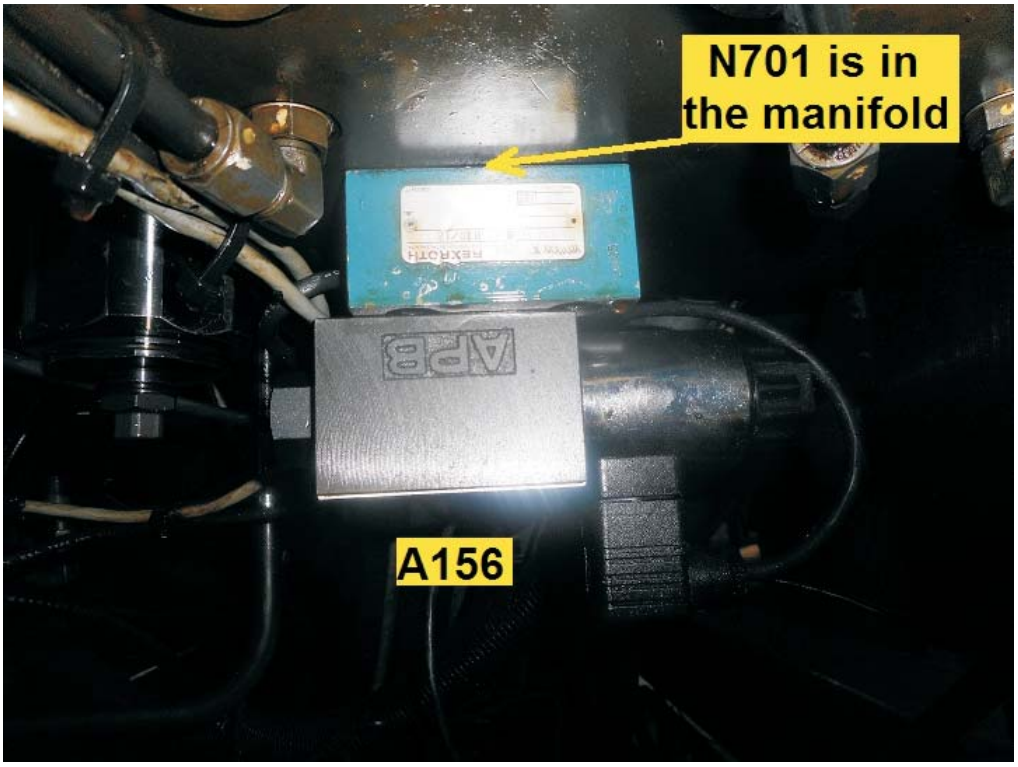

A156 Valve

A160 Directional Valve

The valve solenoid is energized when the Extruder motor is commanded to rotate. The force of the solenoid will cause the spool to shift which directs the pressure downstream of valve A188 to the load sensing spool on the P902 hydraulic pump. The setting of the load sensing spring is 200 PSI. When driving the Extruder motor, the electrical signal to the A188 valve coil determines the flow to the motor. The A188 valve will restrict the flow to the motor causing the pressure to build up at the P902 outlet port. Once the pressure at the

outlet port of the pump is 200 PSI higher than the pressure required to rotate the motor, the load sensing valve on the pump will shift. Pressure is then ported through the load sensing spool to de-stroke the pump. The pump will only deliver enough volume to maintain the 200 PSI pressure differential across the A188 valve. By maintaining a constant pressure drop, the flow will remain constant regardless if the pressure required to drive the motor changes.

The valve solenoid is de-energized in all other modes of operation. The spool will then hydraulically connect the pressure at the inlet port of valve A188 to the load sensing spool. This will allow the same pressure to be ported to both sides of the load sensing spool. The valve will not shift because of the 200 PSI spring force being exerted on one side of the spool. The maximum pressure at the P902 pump outlet port will now be controlled by the PC pressure compensator spring setting and the current signal to the A189 proportional relief valve.

If this valve fails to shift then the speed of the extruder motor can vary as the screw is rotated. The valve has a manual override which can be actuated to determine if the problem is a bad coil, loose or broken wires or no signal from the PLC. A160 is a two position, three way, 24 volt solenoid operated, spring return, directional valve.

A163 Directional Valve

This valve is used to control the function of the N709 logic valve. When the solenoid is de-energized, the pilot pressure on top of the logic valve is ported to the drain line. The pressure acting on the bottom of the logic piston will only have to overcome the logic spring (4 bar) to shift the valve open. This allows the 65 GPM pump cartridge volume to flow through the logic valve and back to tank at low pressure.

When the pump volume is required in the system, the solenoid is energized. A plunger is pulled in by magnetism which shifts the spool into the “B” (crossed arrows) position. The flow through the directional valve spool is the blocked due to the pipe plug in the “B” port. This permits the pilot pressure to build on top of the logic piston, shifting the valve closed. The valve will remain closed until the sum total of the logic spring (4 bar), R709 spring setting (200 PSI) and the electrically selected pressure of the A189 pilot relief valve is reached. When this pressure is reached, the logic piston will shift open and port all or part of the pump volume back to the tank.

If the solenoid fails or the spool does not shift, the logic valve will open at 4 bar at all times. This will result in a slower operating speed of the system. A163 is a two position, four way, single solenoid, 24 volt solenoid operated, spring return, directional valve.

A164 Directional Valve

This valve is used to control the function of the N710 logic valve. When the solenoid is de-energized, the pilot pressure on top of the logic valve is ported to the drain line. The pressure acting on the bottom of the logic piston will only have to overcome the logic spring (4 bar) to shift the valve open. This allows the 43 GPM pump cartridge volume to flow through the logic valve and back to tank at low pressure.

When the pump volume is required in the system, the solenoid is energized. A plunger is pulled in by magnetism which shifts the spool into the “B” (crossed arrows) position. The flow through the directional valve spool is the blocked due to the pipe plug in the “B” port. This permits the pilot pressure to build on top of the logic piston, shifting the valve closed. The valve will remain closed until the sum total of the logic spring (4 bar), R710 spring setting (200 PSI) and the electrically selected pressure of the A189 pilot relief valve is reached. When this pressure is reached, the logic piston will shift open and port all or part of the pump volume back to the tank.

If the solenoid fails or the spool does not shift, the logic valve will open at 4 bar at all times. This will result in a slower operating speed of the system. A164 is a two position, four way, 24 volt solenoid operated, spring return, directional valve.

A165 Directional Valve

This valve is used to control the function of the N708 logic valve. When the solenoid is de-energized, the pilot pressure on top of the logic valve is ported to the drain line. The pressure acting on the bottom of the logic piston will only have to overcome the logic spring (4 bar) to shift the valve open. This allows the P908 and the 13 GPM (P913 pump) pump volumes to flow through the logic valve and back to tank at low pressure.

When the pumps' volumes are required in the system, the solenoid is energized. A plunger is pulled in by magnetism which shifts the spool into the "B" (crossed arrows) position. The flow through the directional valve spool is the blocked due to the pipe plug in the "B" port. This permits the pilot pressure to build on top of the logic piston, shifting the valve closed. The valve will remain closed until the sum total of the logic spring (4 bar), R708 spring setting (200 PSI) and the electrically selected pressure of the A189 pilot relief valve is reached. When this pressure is reached, the logic piston will shift open and port all or part of the pumps' volumes back to the tank. If the A181 valve solenoid is energized, the N708 valve will open when the sum total of the logic valve spring (4 bar), R708 spring setting (200 PSI) and P706 valve setting is reached.

If the solenoid fails or the spool does not shift, the logic valve will open at 4 bar at all times. This will result in a slower operating speed of the system. A165 is a two position, four way, 24 volt solenoid operated, spring return, directional valve.

A166 Directional Valve

This valve is used to control the function of the N711 logic valve. When the solenoid is de-energized, the pilot pressure on top of the logic valve is ported to the drain line. The pressure acting on the bottom of the logic piston will only have to overcome the logic spring (4 bar) to shift the valve open. This allows the 65 GPM and 34 GPM cartridges' volumes to flow through the logic valve and back to tank at low pressure.

When the pumps' volumes are required in the system, the solenoid is energized. A plunger is pulled in by magnetism which shifts the spool into the "B" (crossed arrows) position. The flow through the directional valve spool is the blocked due to the pipe plug in the "B" port. This permits the pilot pressure to build on top of the logic piston, shifting the valve closed. The valve will remain closed until the sum total of the logic spring (4 bar), R711 spring setting (200 PSI) and the electrically selected pressure of the A189 pilot relief valve is reached. When this pressure is reached, the logic piston will shift open and port all or part of the pumps' volumes back to the tank.

If the solenoid fails or the spool does not shift, the logic valve will open at 4 bar at all times. This will result in a slower operating speed of the system. A166 is a two position, four way, 24 volt solenoid operated, spring return, directional valve.

A177 Directional Valve

When operating all functions except the Hydraulic Eject and Core Pullers, the solenoid is de-energized. This directs the P908 pump volume through the A188 valve and to all circuits connected downstream. When the solenoid on the pilot valve is energized, internal pilot pressure will shift the main spool into the "B" (crossed arrows) position. The P908 pump volume is then ported to the Hydraulic Eject and Core Puller Directional valves. A177 is a two position, four way, 24 volt solenoid controlled, internally piloted and drained, spring return directional valve.

A181 Directional Valve

When operating all functions except the Hydraulic Eject and Core Pullers, the solenoid is de-energized. When the solenoid is energized, the valve spool shifts to direct oil from the outlet port of the R708 valve to the inlet port of the P706 valve. The P908 pump and the 13 GPM cartridge in the P913 pump will deliver oil to the Hydraulic Ejector and Core Pullers until the sum total of the N708 valve spring (4 Bar), the R708 spring (200 PSI) and the P706 spring is reached. The N708 valve will then open and dump all or part of the pumps' volume back to the tank.

If the solenoid fails or the spool fails to shift then the pressure to the Ejector and Pullers will most likely be too low, depending on the electrical signal to the A189 pilot relief valve. A181 is a two position, four way, 24 volt solenoid controlled, spring return, directional valve.

A184 Proportional Valve

This valve is used to control the speed and pressure when injecting the molten plastic into the mold. The valve is also used during the Melt Decompression mode of operation. This valve normally operates off of a positive and negative 10 volt D.C. command signal. In some cases a 4-20 milliamp signal is used. For purposes of explanation a 0-10 volt signal will be used. To inject the plastic, a positive or negative voltage is input from the PLC to the amplifier on the valve. A corresponding current signal will then be applied to the pilot valve coil. The pilot spool then shifts and directs internal pilot pressure to shift the main spool into the "A" (straight arrows) position. As the main spool shifts, an LVDT (linear variable differential transformer) will electrically indicate the amount that the spool shifts. When the command voltage to the amplifier and the LVDT feedback voltage from the main spool equals 0, the pilot spool will shift to the "closed" position. This blocks flow in and out of the main spool which causes it to stop shifting and hold position. This permits the flow

through the main spool to be proportional to the applied voltage. Flow from the selected pumps will flow through the main spool and into the rod sides of the injection cylinders. The linear potentiometer connected on the injection unit will indicate the position of the screw as the plastic is injected into the mold. The P204 pressure transducer converts the pressure in the rod sides of the cylinders into a proportional voltage. This is necessary so that the proportional valve can be controlled to maintain the desired pressure during the injection cycles.

When the Extruder is rotating the screw, the valve will shift into the position located between the center and “B” position. This provides a flow path for the oil in the rod sides of the cylinders to return to the tank as the screw is forced back.

Once the Extruder motor rotates the screw for a full shot, the Melt Decompression cycle will start. A voltage of the opposite polarity is used to shift the valve as described above into the “B” (crossed arrows) position. The spool will once again shift until the LVDT feeds back the desired voltage. Oil will then be ported to the full piston sides of the cylinders until the desired position is reached. This prevents drooling of the molten plastic out of the nozzle.

If the injection cycle is not operating properly, then the command signal from the PLC and the feedback signal from main spool LVDT can be checked. This can be done by connecting a test box between the cable and proportional valve. Depending on the type box used, the command and feedback signals may be displayed. A potentiometer may be available on the box to drive the valve separate of the signal from the PLC.

The pilot valve normally operates off of a 24 volt signal from the power supply. This can be checked by removing the cable to the valve and connecting the red lead of the multi-tester to the “A” connection and the black lead to the “B” connection. With the cable

removed the command voltage can also be checked at the “D” and “E” pins. This should be a positive or negative 0-10 volts signal depending on whether the cylinders are being commanded to extend or retract.

If the cylinders are drifting or rapidly oscillating, then the valve may be out of null. There is a plastic Allen head screw located on the main spool LVDT housing. This adjustment can be rotated until the drifting or oscillating stops. Make sure the pilot plug arrangement of the new valve being installed is the same as the old valve. This valve has a plug blocking the flow from “T” port of the pilot valve to the tank line of the main spool. The valve is externally drained though the “Y” port of the valve. There is a plug with an orifice between the “P” port of the main spool and the “P” port of the pilot valve. This orifice controls the rate of flow to the pilot valve and therefore the speed that the main spool shifts.

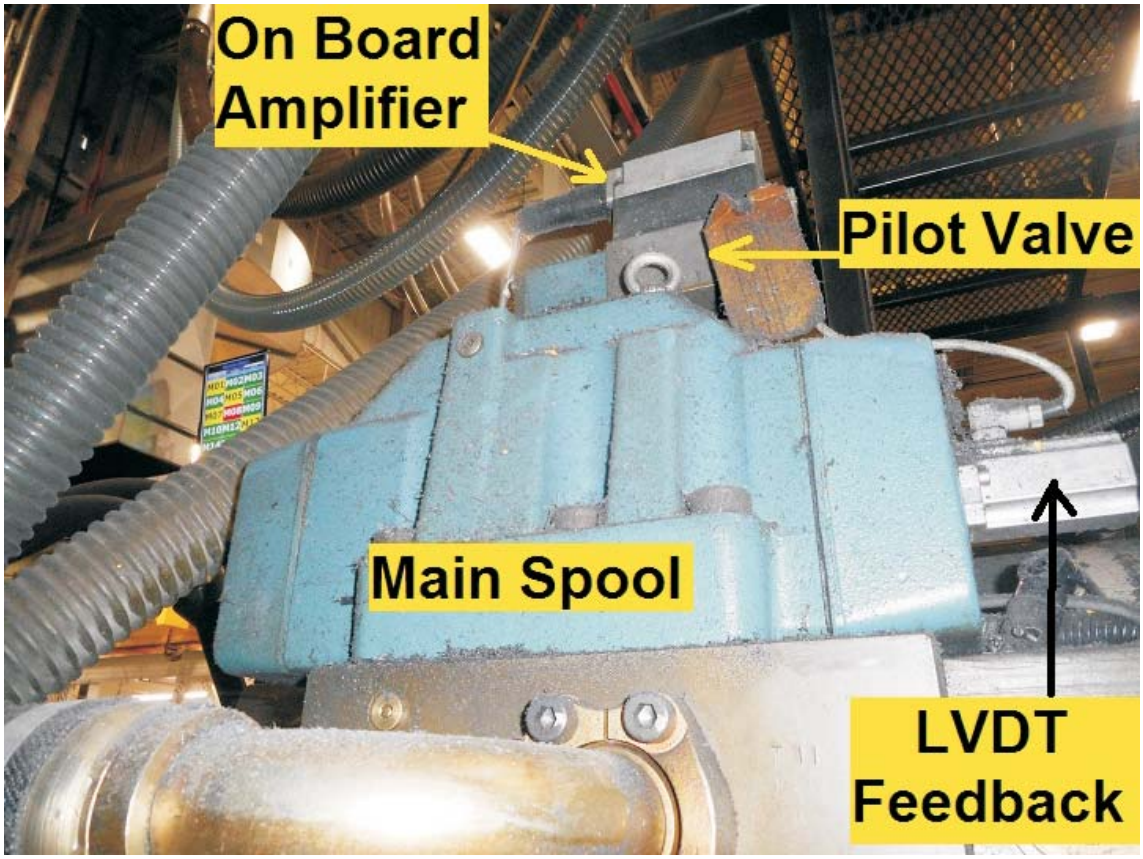

A184 Valve

A186 Directional Valve

The valve is used to control the N211 logic valve. The valve solenoid is de-energized in all modes except when rotating the Extruder motor. When the solenoid is de-energized, pilot pressure is ported through the spool, through the shuttle valve then to the top of the logic piston. This pilot pressure will shift and hold the valve in the closed position. When the command is given to rotate the Extruder motor, the valve solenoid is energized. Pressure on top of the valve is then ported back to the tank. The pressure at the inlet of the logic valve will shift the piston open allowing flow to the Extruder motor. The pressure downstream of the valve will then be ported through the shuttle valve and to the top of the logic piston. The logic valve will operate as a check valve in this mode. As long as the pressure at the inlet port can overcome the pressure at the outlet port and the logic valve spring (4 bar), oil will flow through the valve. If the pressure were to equalize, the logic piston will shift closed due to the additional force of the spring.

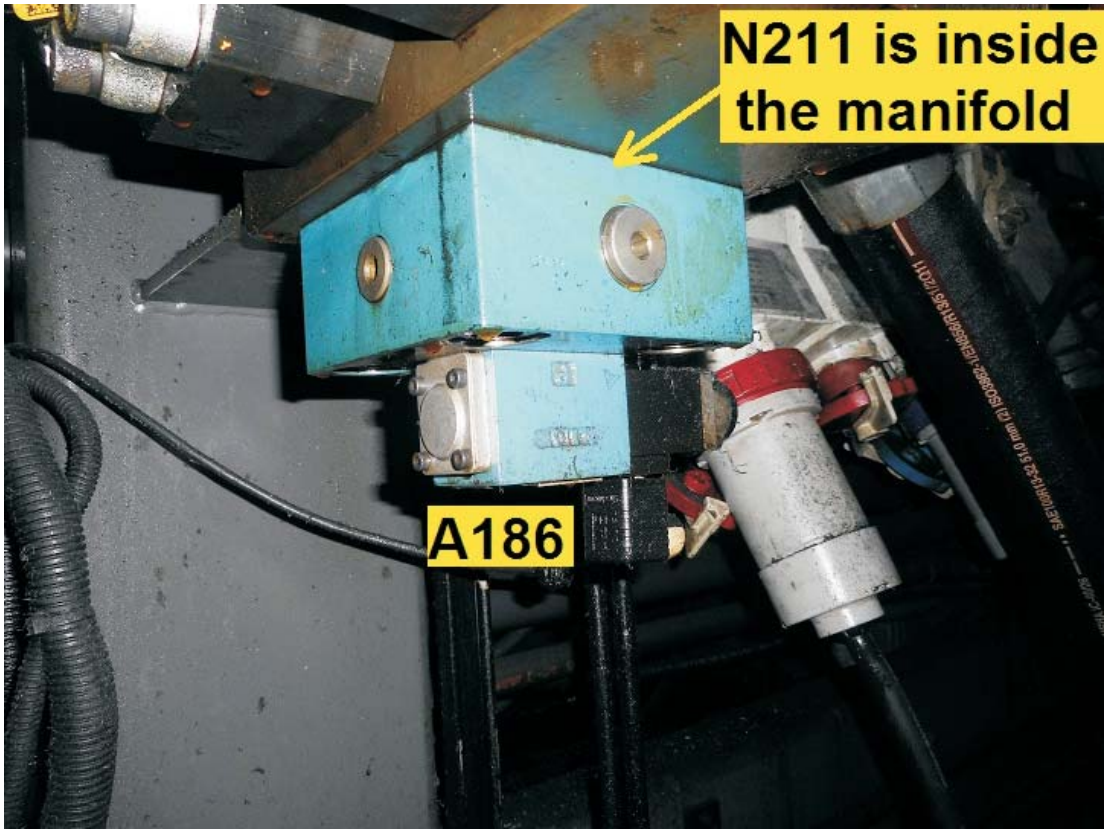

A186 Valve

A188 Proportional Valve

The valve consists of a proportional pilot valve, a logic valve and an LVDT feedback. The valve operates off of a variable D.C voltage. When there is no electrical signal applied, pilot pressure will be directed through the pilot valve then to the top of the logic valve shifting it closed. When operating the clamps, injection cylinders or extruder motor an electrical signal is input into the valve amplifier. Let's say for example that the input is +8 volts. The amplifier will send a proportional current signal to the pilot valve coil. The pilot spool then shifts and ports the oil on top of the logic piston back to the tank. The pressure on the bottom of the piston shifts the valve open. As the valve opens, the LVDT will electrically indicate the amount of movement. Once -8 volts is sent back to the amplifier the pilot valve will shift closed and the logic valve will be maintained at that position.

To troubleshoot the valve put the leads of a multi-tester on the specific connections on the amplifier for the command and feedback voltages. The feedback should follow the command voltage.

A189 Proportional Pilot Relief Valve

The relief valve normally operates off a variable 0 – 10 volt signal that is input from the PLC into the valve amplifier. The amplifier sends a resulting current signal to the coil. The current to the coil determines the pressure that the valve will shift open. The valve is used for two purposes in this system. The first is to control the maximum pressure at the outlet of the P902 pump in all modes except when the extruder is rotating. The compensator spring on the pump is set to 400 PSI. The A189 valve is connected in series with the compensator spring. The pump will deliver maximum volume until the sum total of the compensator spring and the electrically selected pressure of A189 is reached. The compensator spool and A189 valve will then shift open allowing the pump to de-stroke. The pump will only deliver enough oil to maintain the sum total of the two settings.

The second purpose of the valve is to limit the pressure that the N708 - N711 logic valves shift open. The P916 pumps' circuit will be used for explanation. When the pumps are supplying oil to the system a small amount of fluid is ported through a .8mm orifice and to the top of the N711 logic valve. The pressure on top of the logic valve is limited by the sum total of the R711 setting (200 PSI) and the electrically selected pressure to the A189 valve coil. For example, if the current to the A189 coil requires 1000 PSI to shift open then the pressure on top of the logic valve will be limited to 1200 PSI. The logic valve spring also exerts a force downward on the valve of 4 bar (58 PSI). Therefore once the pressure on the bottom of the piston builds slightly higher than 1258 PSI, the valve will open and all or part of the pumps' volume will flow through the piston and back to the tank.

If this valve coil fails or sticks in the open position, then the pressure downstream of the P902 pump will be 400 PSI. The pressure downstream of the fixed displacement pumps will be approximately 200 PSI.

A191 Pilot Relief Valve

The valve is connected in the pilot line of the P910 pump compensator. The relief valve normally operates off a variable 0 – 10 volt signal that is input from the PLC into the valve amplifier. The amplifier sends a resulting current signal to the coil. The current on the coil determines the pressure that the valve will shift open. Once the electrically selected pressure is reached, the compensator spool will shift open and the pump will be de-stroked. The pump will deliver only enough oil to maintain the electrically selected pressure. The valve is used to control the clamping, mold protect and opening pressures. The valve is also used to control the pressures that the N106 and N113 logic valves open in the clamp circuit. If the valve coil fails or the spool sticks open then little or no clamping pressure will be the result.

A228 Directional Valve

When the oil reaches a preset temperature, the solenoid on this valve will energize. This allows water to flow out of the tubes in the heat exchanger. If the solenoid on this valve fails, the system may shutdown on high oil temperature.

C708 Pilot Relief Valve

The valve limits the maximum pressure in the P908 pump and in the 13 GPM pump cartridge of the P913 pump. To deliver the pumps' volumes to the system, the A165 solenoid energizes. This allows pressure to build up on top of the N708 logic valve. During normal operation, the maximum pressure is limited by the sum total of the R708 valve spring (200 PSI) and the electrically selected pressure of the A189 valve. If the pressure were to build to 2400 PSI, the C708 pilot relief valve will open and port the oil on top of the logic piston back to the tank. The pressure on the bottom of the piston will build slightly higher to shift the valve open and dump the pumps' volumes back to the tank.

If the valve was to fail open, the logic valve would shift open at 4 bar and port the pumps' volumes back to the tank. The pilot relief valve can be taken apart and inspected for contamination, wear, bad seals and a broken spring.

C709 Pilot Relief Valve

The valve limits the maximum pressure in the 65GPM cartridge of the P913 pump outlet port. To deliver the pump volume to the system, the A163 solenoid energizes. This allows pressure to build up on top of the N709 logic valve. During normal operation, the maximum pressure is limited by the sum total of the R709 valve spring (200 PSI) and the electrically selected pressure of the A189 valve. If the

pressure were to build to 2650 PSI, the C709 pilot relief valve will open and port the oil on top of the logic piston back to the tank. The pressure on the bottom of the piston will build slightly higher to shift the valve open and dump the pump volume back to the tank.

If the valve was to fail open, the logic valve would shift open at 4 bar and port the pump volume back to the tank. The pilot relief valve can be taken apart and inspected for contamination, wear, bad seals and a broken spring.

C710 Pilot Relief Valve

The valve limits the maximum pressure in the 43 GPM cartridge of the P913 pump outlet port. To deliver the pump volume to the system, the A164 solenoid energizes. This allows pressure to build up on top of the N710 logic valve. During normal operation, the maximum pressure is limited by the sum total of the R710 valve spring (200 PSI) and the electrically selected pressure of the A189 valve. If the pressure were to build to 2400 PSI, the C710 pilot relief valve will open and port the oil on top of the logic piston back to the tank. The pressure on the bottom of the piston will build slightly higher to shift the valve open and dump the pump volume back to the tank.

If the valve was to fail open, the logic valve would shift open at 4 bar and port the pump volume back to the tank. The pilot relief valve can be taken apart and inspected for contamination, wear, bad seals and a broken spring.

C711 Pilot Relief Valve

The valve limits the maximum pressure in the P916 pump outlet port. To deliver the pump volume to the system, the A166 solenoid energizes. This allows pressure to build up on top of the N711 logic valve. During normal operation, the maximum pressure is limited by the sum total of the R711 valve spring (200 PSI) and the electrically

selected pressure of the A189 valve. If the pressure were to build to 2400 PSI, the C711 pilot relief valve will open and port the oil on top of the logic piston back to the tank. The pressure on the bottom of the piston will build slightly higher to shift the valve open and dump the pump volume back to the tank.

If the valve was to fail open, the logic valve would shift open at 4 bar and port the pump volume back to the tank. The pilot relief valve can be taken apart and inspected for contamination, wear, bad seals and a broken spring.

N211 Logic Valve

This valve is used as a directional and check valve for the Extruder hydraulic motor. The logic valve is controlled by the A186 directional valve. To rotate the Extruder motor, the A186 solenoid is energized which shifts the spool to initially port the pressure on top of the logic valve back to the tank. The pressure on the bottom of the piston will then shift the valve open directing flow to the motor. The pressure at the outlet port of the logic valve will shift the shuttle valve to the left. This allows the valve to operate as a check valve. As long as the pressure at the inlet port can overcome the pressure at the outlet port and valve spring (4 bar), oil will flow through the valve. If the pressure equalizes, the valve will shift closed. The valve is located inside the valve manifold.

N701 Logic Valve

This valve is controlled by the A156 directional valve. When the solenoid is de-energized, the pressure on top of the N701 logic valve is directed to the tank. This allows the logic valve to open at 4 bar porting the pressure in the line downstream of the A188 valve back to the tank. The valve solenoid will de-energize during various times in the cycle to allow the pressure to bleed down before starting the next cycle.

When necessary to operate extruder, injection cylinders or clamp circuit, the solenoid is energized. This directs pressure from the inlet port of the valve to the top of the logic valve. The logic valve piston will then shift closed because of the additional force of the 4 bar spring pushing downward.

If the logic valve fails open then the system will operate slower or possibly not at all. The valve can be removed from the manifold and inspected for wear, a bad spring and bad seals on the sleeve.

N708 Logic Valve

This valve serves two purposes in the P908 pump and the 13 GPM cartridge in the P913 pump system. The first is to operate as a low pressure dump valve when the pumps' volumes are not needed in the system. The A165 valve solenoid will be de-energized in this condition. This allows any pressure on top of the logic valve to be ported back to the drain line. The logic valve will then shift open at 4 bar porting the pumps' volumes back to the tank at low pressure.

The second purpose of the valve is to operate as a high pressure relief valve when the pumps' volumes are required in the system. The A165 solenoid is energized in this mode which shifts the directional valve spool into the "B" (crossed arrows) position. Pressure will build up on top of the logic valve because of the pipe plug in the "B" port of the directional valve. The valve will shift and remain closed until the sum total of the logic spring (4 bar), R708 spring setting (200 PSI) and the electrically selected pressure of the A189 pilot relief valve is reached. When this pressure is reached, the logic piston will shift open and port all or part of the pumps' volumes back to the tank.

If this valve fails open, then all or part of the pumps' volume will return to the tank. The system will operate at a slower speed if this were to occur. The valve can be removed from the manifold and inspected for wear, a bad spring and bad seals on the sleeve.

N709 Logic Valve

This valve serves two purposes for the 65 GPM pump cartridge in the P913 pump assembly. The first is to operate as a low pressure dump valve when the pump's volume is not needed in the system. The A163 valve solenoid will be de-energized in this condition. This allows any pressure on top of the logic valve to be ported back to the drain line. The logic valve will then shift open at 4 bar porting the pump's volume back to the tank at low pressure.

The second purpose of the valve is to operate as a high pressure relief valve when the pumps' volumes are required in the system. The A163 solenoid is energized in this mode which shifts the directional valve spool into the "B" (crossed arrows) position. Pressure will build up on top of the logic valve because of the pipe plug in the "B" port of the directional valve. The valve will shift and remain closed until the sum total of the logic spring (4 bar), R709 spring setting (200 PSI) and the electrically selected pressure of the A189 pilot relief valve is reached. When this pressure is reached, the logic piston will shift open and port all or part of the pumps' volumes back to the tank.

If this valve fails open, then all or part of the pumps' volumes will return to the tank. The system will operate at a slower speed if this were to occur. The valve can be removed from the manifold and inspected for wear, a bad spring and bad seals on the sleeve.

N710 Logic Valve

This valve serves two purposes for the 43 GPM pump cartridge in the P913 pump assembly. The first is to operate as a low pressure dump valve when the pump's volume is not needed in the system. The A164 valve solenoid will be de-energized in this condition. This allows any pressure on top of the logic valve to be ported back to the drain line. The logic valve will then shift open at 4 bar porting the pump's volume back to the tank at low pressure.

The second purpose of the valve is to operate as a high pressure relief valve when the pump's volume is required in the system. The A164 solenoid is energized in this mode which shifts the directional valve spool into the "B" (crossed arrows) position. Pressure will build up on top of the logic valve because of the pipe plug in the "B" port of the directional valve. The valve will shift and remain closed until the sum total of the logic spring (4 bar), R710 spring setting (200 PSI) and the electrically selected pressure of the A189 pilot relief valve is reached. When this pressure is reached, the logic piston will shift open and port all or part of the pump volume back to the tank.

If this valve fails open, then all or part of the pump's volume will return to the tank. The system will operate at a slower speed if this were to occur. The valve can be removed from the manifold and inspected for wear, a bad spring and bad seals on the sleeve.

N711 Logic Valve

This valve serves two purposes for the P916 double pump assembly. The first is to operate as a low pressure dump valve when the pump's volume is not needed in the system. The A166 valve solenoid will be de-energized in this condition. This allows any pressure on top of the logic valve to be ported back to the drain line. The logic valve will then shift open at 4 bar porting the pump's volume back to the tank at low pressure.

The second purpose of the valve is to operate as a high pressure relief valve when the pump's volume is required in the system. The A166 solenoid is energized in this mode which shifts the directional valve spool into the "B" (crossed arrows) position. Pressure will build up on top of the logic valve because of the pipe plug in the "B" port of the directional valve. The valve will shift and remain closed until the sum total of the logic spring (4 bar), R711 spring setting (200 PSI) and the electrically selected pressure of the A189 pilot relief valve is

reached. When this pressure is reached, the logic piston will shift open and port all or part of the pump volume back to the tank.

If this valve fails open, then all or part of the pump's volume will return to the tank. The system will operate at a slower speed if this were to occur. The valve can be removed from the manifold and inspected for wear, a bad spring and bad seals on the sleeve.

N712 Logic Valve

This valve will operate as a check valve in this system. As long as the pressure at the inlet port can build higher than the pressure at the outlet port and spring pressure (2 bar), oil can flow through the valve. If the pressure equalizes, the valve will shift closed due to the force of the valve spring.

If this valve fails open, then some volume from other pumps may be lost through the N711 valve when the A166 solenoid is de-energized.

P203 Check Valve

When the Extruder is rotating and forcing the material in front of the screw, the oil in the rod sides of the cylinders flows through the A184 proportional valve and back to the tank. This creates a vacuum in the full piston sides of the cylinders. The return oil from the rod sides plus oil from the reservoir will flow through this check valve and into the full piston sides of the cylinders. This prevents cavitation in which the air would be pulled out of the hydraulic oil.

If this valve fails open, the cylinders will extend slower or possibly not at all when in the Melt Decompression mode. There may also be a loss of speed control as the molten plastic is injected into the mold.

P204 Pressure Transducer

The transducer will convert the pressure in the rod sides of the cylinders into a proportional 0-10 volts D. C. signal. The signal is sent back to the PLC representing the pressure when injecting the plastic and the back pressure when in the Melt Decompression phase.

P212 Hydraulic Motor

This fixed displacement, externally drained, radial piston motor is used for rotating the injection screw. If the motor is thought to be excessively worn, the flow out of the case drain can be checked. Although no specific flow rate was provided by the manufacturer, normally 1 GPM or less is considered normal. The motor contains a distributor that ports high pressure fluid to some of the pistons on the power stroke and directs the oil in the other pistons to the outlet port. If the distributor gets out of time, the motor may run erratically or possibly not at all.

P212 Extruder Motor

P213 and P214 Check Valves

This spring loaded check valves maintain a back pressure at the outlet of the hydraulic motor and at the tank port of the A184 proportional valve. The check valves will maintain oil in the lines when the extruder or injection cylinders are not operating.

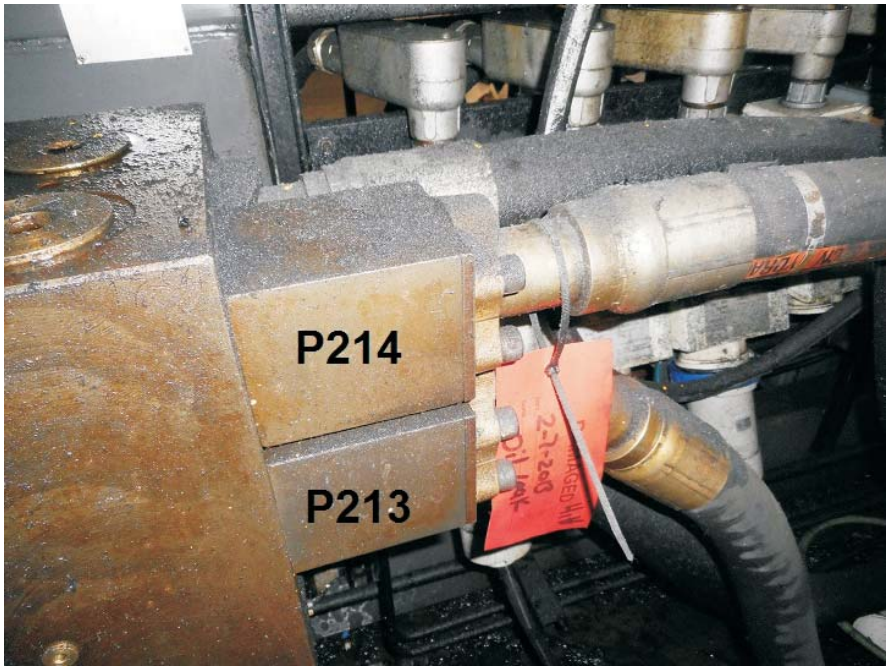

P213 & P214

P702 Filter

The 10 micron pressure filter traps contaminants generated by the P908 pump and the 13 pump cartridge inside the P913 pump assembly. When operating at high pressure, normal pump wear can generate enough contamination to damage downstream components. When the element becomes contaminated and the pressure drop across the filter reaches the setting of the A131 pressure switch, an alarm will be indicated. The element should be changed as soon as possible. If this is not done and the pressure reaches the rating of the internal check valve, oil will bypass the element.

P703 Filter

The 10 micron pressure filter traps contaminants generated by the 43 GPM pump cartridge inside the P913 pump assembly. When operating at high pressure, normal pump wear can generate enough contamination to damage downstream components. When the element becomes contaminated and the pressure drop across the filter reaches the rating of the internal check valve, oil will bypass the element. This filter should be changed on a regular basis.

P706 Pilot Relief Valve

This valve limits the maximum pressure to the Hydraulic Ejector and Core circuits. To perform any of these functions the A177 and A181 solenoids are energized. The A177 valve will shift into the “B” (crossed arrows) position to direct flow from the P708 and the P913 pumps’ 13GPM cartridge to these circuits. The A181 valve will direct the outlet port of the R708 pilot relief valve to the inlet port of the P706 pilot relief valve. The maximum pressure to the Ejector and Core circuits is then limited by the sum total of the two pilot relief valves and the N708 logic valve spring. If this pressure is reached, R708 and P706 will shift open limiting the hydraulic pressure on top of the N708 logic valve. The pressure acting on the bottom of the logic valve will compress the valve spring and shift open. This provides a flow path for the excess pumps’ volumes to return to the tank.

If the P706 pilot relief valve fails open, then a low pressure will be indicated when operating the Hydraulic Ejector and Core circuits. The valve can be taken apart and checked for contamination, bad seals and wear. Caution should be used when removing the valve as some pressure may be locked in the line. Manually actuating the A181 valve should help in relieving some of the pressure.

P717 Relief Valve

This valve is used as an extreme safety device in the system. In the event the pump compensator spool was to fail closed, the valve would open dumping any excess volume through the valve spool and back to the tank. The tank line of this valve will be hot if this were to occur. It is important that this valve be set above the setting of the compensator. The recommended setting of this relief valve is 2900 PSI. Please refer to our Maintenance Basic Hydraulic Troubleshooting manual, Hydraulic Pumps section for properly setting the relief valve and pump compensator. If the relief valve is set below the compensator or load sensing pressure at the pump outlet, then the pump will deliver maximum volume at all times. This means that any oil that the pump is delivering that the system does not require will return to tank through the relief valve spool. Heat will once again be created when this occurs. If this valve were to fail in the open position, then the circuits would operate very slowly or not at all.

P902 Pump

This is a 64 GPM, variable displacement, pressure compensating, externally drained piston pump with load sensing capability. When driving the extruder motor, the pressure downstream of the A188 valve is ported through valve A160 (which is energized) and to the spring side of the load sensing spool. The pressure at the pump outlet is ported internally in the pump to the opposite side of the load sensing spool. When the pump outlet pressure is high enough to overcome the pressure and spring force on the opposite side of the valve, the spool will shift and direct pressure to an internal piston to de-stroke the pump. The pump will then only deliver enough oil to maintain the valve in the shifted position. The load sensing valve should be adjusted so that the pressure at the pump outlet port is 200 PSI above the pressure at the A188 outlet port. This can be done by inserting gauges in the MP1 and MX3 quick disconnects.

When the A160 valve is de-energized, the pressure at outlet port of the pump is limited by the spring setting of the compensator and the current to the A189 valve coil. The recommended setting of the compensator spring is 400 PSI. This can be set by reducing the current to 0 to A189 or removing the A189 valve solenoid. The PLC will vary the voltage input to the A189 valve amplifier to limit the pressure at the pump outlet port during various times in the cycle. The amplifier will send a proportional current signal to the A189 valve for a given input voltage. When the pressure at the outlet port reaches the sum total of the compensator spring and the electrically selected pressure of A189, the compensator spool will shift. The pump will then de-stroke and deliver only enough oil to maintain the pressure.

If the compensator or load sensing spool fails open, the pump will be de-stroked to near 0 GPM and a low pressure at the outlet port will exists. If the compensator spool fails to shift, the pump will never compensate and will deliver maximum flow at all times. Whenever the full pump volume is not being used in the machine, pressure will build to the P717 relief valve setting and return to tank at high pressure generating heat. If either problem exist, turn the pump off and make sure the pressure at the outlet port is 0 PSI. Remove the compensator and load sensing valves from the pump. The compensator is located nearest the pump housing. The load sensing valve is mounted on the compensator housing. Inspect the hollow orifices in the valve spools for contamination. Make sure that there is no trash inside the housings and verify that the springs are not bent, broken or rusted. Re-assemble the compensator and load sensing valves and attempt to reset the springs to the proper settings.

Oil that bypasses internally across the tight tolerances in the pump will drain back to tank through the case drain to keep pressure from building against the shaft seal. As the pump wears, these tolerances become greater resulting in higher case flow. Thus case flow will

increase as the pump becomes more worn. The most effective way to track pump wear is by measuring the amount of case flow. When relatively new, case flow should be approximately 1 – 3% of the total output, or about 5/8 – 2 GPM. If case flow increases to as much as 10% (6.4 GPM) of the total pump volume, the pump should be replaced. The case drain line can be removed and ported into a 5 gallon bucket to check the flow rate. A flow meter can be installed in the case drain line for convenient regular measurement of case flow.

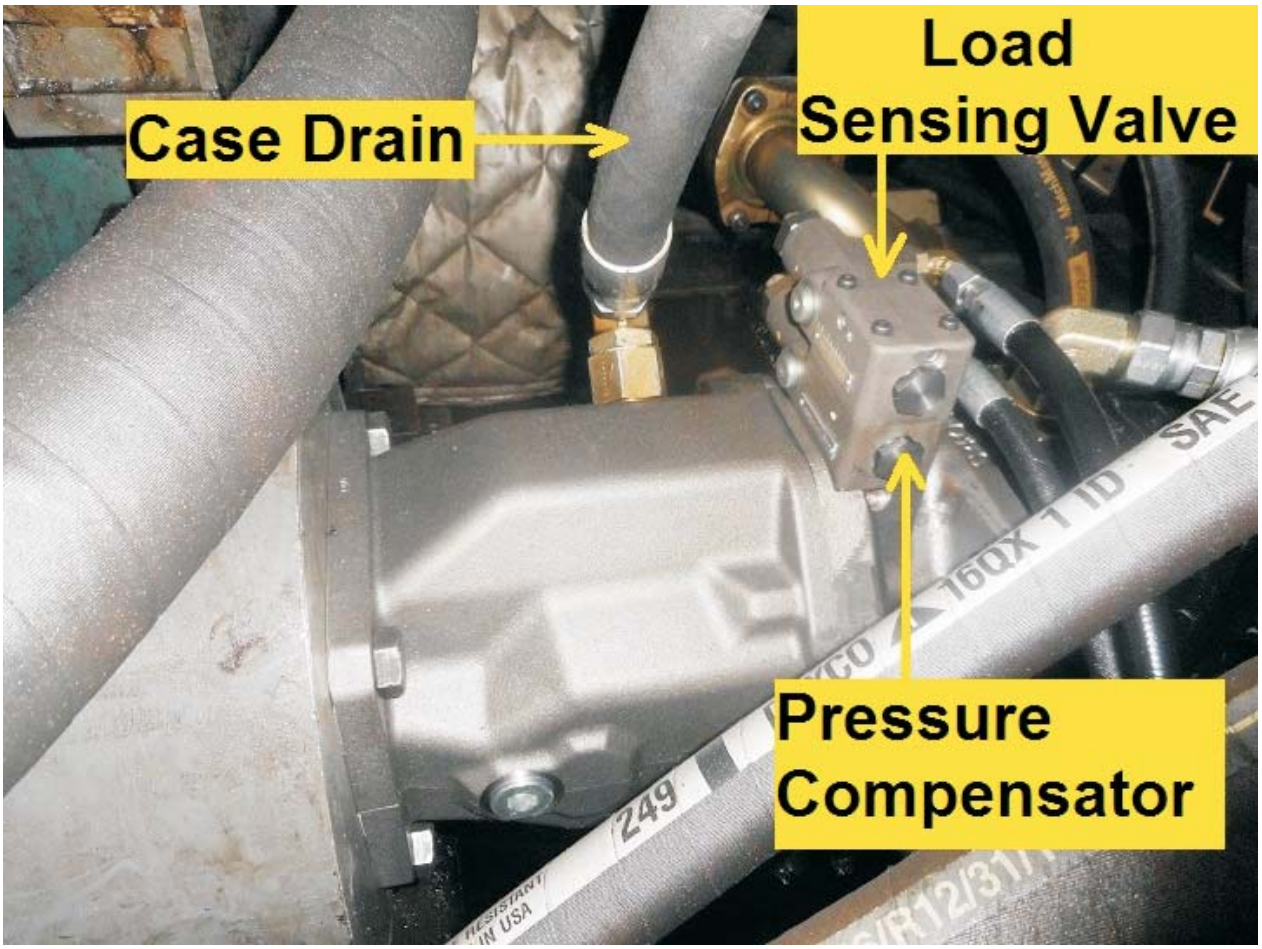

P902 Pump

P903 Directional Valve

When the system is shut down, this valve connects the oil in the tank through the valve spool and to the drain and cooler outlet lines. This will keep the lines full of oil. When the P902 pump is turned on, pilot pressure will be directed to this valve for shifting it into the “B” position. This blocks oil flow through the valve. This forces the oil that flows out of the drain and cooler outlet lines back to tank through the two large lines. The valve is a two position, four way, externally piloted, spring return, directional valve.

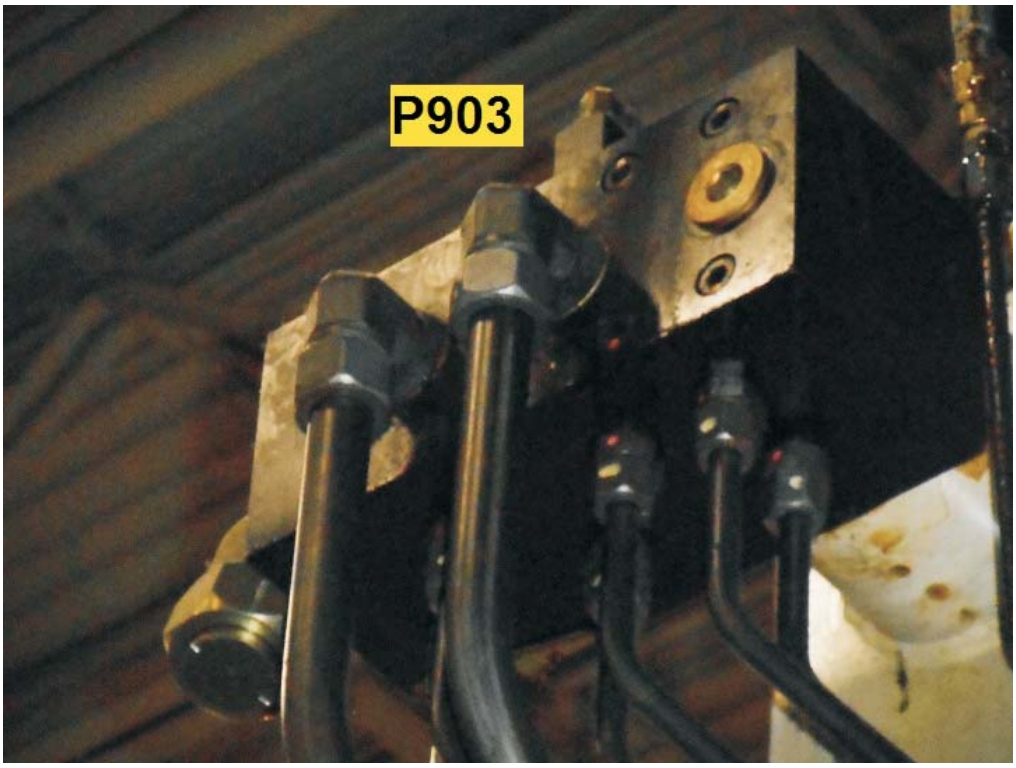

P903 Valve

P907 Suction Strainer

The strainer is located underneath the fluid level. The strainer will filter the large particles of contamination to the P902 pump. If the strainer was to become contaminated then the pump would cavitate. The pump will have a high pitched whining sound when cavitating. Some strainers have a built in, 2 or 3 PSI check valve. If this is the

case, the pump will not develop the high pitched whining sound. When the vacuum pressure in the suction line reaches the rating of the check valve spring, dirty oil will be directed to the pump. The strainer should be removed from the reservoir on a regular basis and cleaned. The strainer can be cleaned by blowing air from the inside out.

P908 Pump

This fixed displacement, 28 GPM, vane type pump supplies oil to the Extruder, Injection Cylinders, Clamps, Hydraulic Eject and Core circuits. The oil that is not used by the system will be ported through the N708 logic valve.

To check the pump, compare the temperature of the pump housing and the suction line. If the pump is badly worn then the some of the oil will bypass the vanes and port plates. Anytime bypassing occurs in a hydraulic system, heat is generated. If the pump housing is a great deal warmer or hotter than the suction line then the pump is most likely bad and should be changed. An initial test would provide a reference for future troubleshooting purposes.

P908 Pump

P909 Suction Strainer

The strainer is located underneath the fluid level. The strainer will filter the large particles of contamination to the P908 and P910 pumps. If the strainer was to become contaminated then the pumps would cavitate. The pumps will have a high pitched whining sound when cavitating. Some strainers have a built in, 2 or 3 PSI check valve. If this is the case, the pumps will not develop the high pitched whining sound. When the vacuum pressure in the suction line reaches the rating of the check valve spring, dirty oil will be directed to the pumps. The strainer should be removed from the reservoir on a regular basis and cleaned. The strainer can be cleaned by blowing air from the inside out.

P910 Pump

This is a 13 GPM, variable displacement, externally drained, remote pressure compensated, piston type pump. The pump is used to supply volume and high pressure to the Clamp cylinder. The A191 proportional valve is connected to the spring side of the “load sensing” spool on the pump. The pump will deliver maximum volume until the sum total of the load sensing spring and the electrically selected pressure of the A191 valve is reached. The load sensing spool will then shift and port oil to an internal piston inside the pump. As the piston extends, the pump is de-stroked. The pump will only deliver enough oil to maintain the load sensing spring and pressure required to shift open the A191 valve. There is a pressure compensator spool located directly below the load sensing spool. The compensator should be set approximately 200 PSI above the highest pressure that is controlled by the A191 valve.

When the system is in idle, the current signal to the A191 valve should be at or near 0 milliamps. This ports the pressure on one side of the load sensing spool back to the tank. The pressure acting on the opposite side of the spool only has to overcome the spring setting.

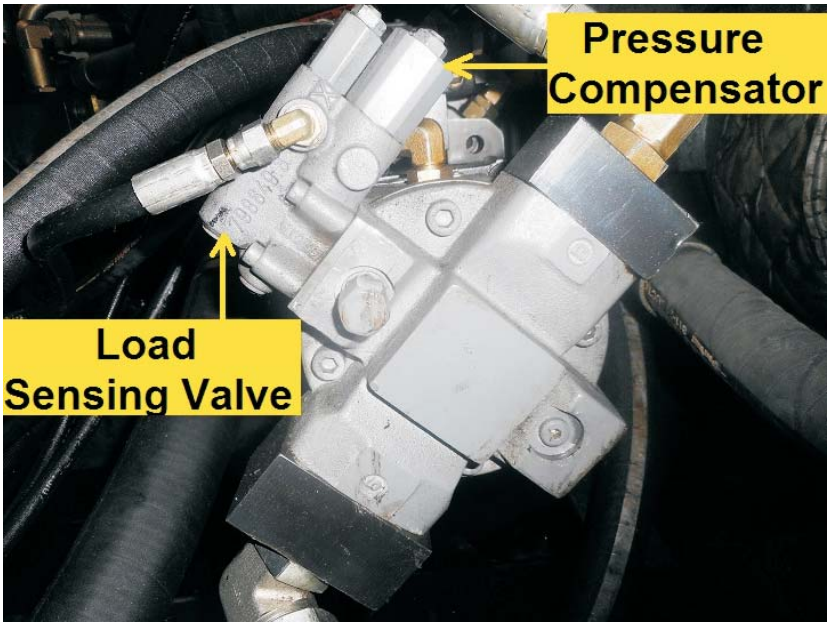

P910 Pump

Once the load sensing spool shifts, oil is directed internally to de-stroke the pump. The pump will only deliver enough oil to maintain the spring setting. This reduces the heat and electric motor horsepower when in the idle mode.

The load sensing and compensator valves can fail either open or closed. If either valve fails open, the pump will be de-stroked to a near 0 GPM flow rate and the pressure at the outlet port will be very low. If the load sensing valve fails closed, the compensator is used as a safety back up to de-stroke the pump and limit the extreme maximum pressure.

If either problem exists, turn the pump off and make sure the pressure at the outlet port is 0 PSI. Remove the load sensing and compensator spools from the pump and take them apart. Inspect the hollow orifices in the valve spools for contamination. Make sure that there is no trash inside the load sensing and compensator housings. Verify that the springs are not bent, broken or rusted. Re-assemble the valves and attempt to reset the springs to the proper setting.

Oil that bypasses internally across the tight tolerances in the pump will drain back to tank through the case drain to keep pressure from building against the shaft seal. As the pump wears, these tolerances become greater, resulting in higher case flow. Thus, case flow will increase as the pump becomes more worn. The most effective way to track pump wear is by measuring the amount of case flow. When relatively new, case flow should be approximately 1 – 3% of the total output, or about 1/8 – 3/8 GPM. If case flow increases to as much as 10% (1.3 GPM) of the total pump volume, the pump should be replaced. The case drain line can be removed and ported into a 5 gallon bucket to check the flow rate. A flow meter can be installed in the case drain line for convenient regular measurement of case flow

P913 Pump Assembly

There are three fixed displacement, vane type pumps located in the P913 pump assembly. The pump volumes, starting with the shaft end, are 65 GPM, 43 GPM and 13 GPM. The oil that is not used by the system will be ported through the no. N709, N710 and N708 logic valves, respectively. There are two checks that can be made to test the pumps to insure that they are delivering the proper volume:

1. Compare the temperature of each pump housing and the suction line. If the pump is badly worn then the some of the oil will bypass the vanes and port plates. Anytime bypassing occurs in a hydraulic system, heat is generated. If the pump housing is a great deal warmer or hotter than the suction line then the pump cartridge is most likely bad and should be changed.

2. Check the current of the electric motor. The amperage that the motor draws depends on the pressure (PSI) and volume (GPM) that the pumps deliver. If the pumps are delivering less oil, then the current will drop on the electric motor. A good rule of thumb to remember is that it takes 1 horsepower to pump 1 GPM at 1500 PSI. A record should be made of the current level when the system is operating properly to establish a reference.

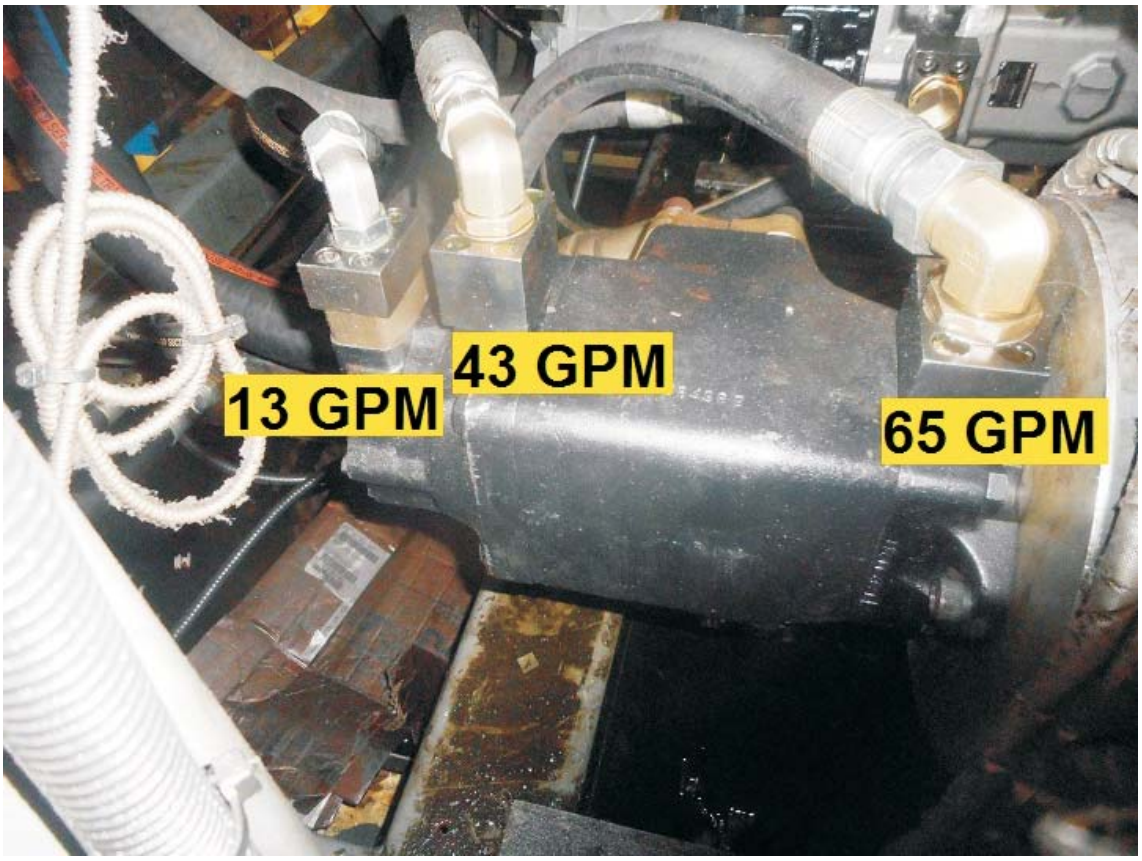

P913 Pump Assembly

P914 Suction Strainer

The strainer is located underneath the fluid level. The strainer will filter the large particles of contamination to the three pumps in the P913 assembly. If the strainer was to become contaminated then the pumps would cavitate. The pumps will have a high pitched whining sound when cavitating. Some strainers have a built in, 2 or 3 PSI check valve. If this is the case, the pumps will not develop the high pitched whining sound. When the vacuum pressure in the suction line reaches the rating of the check valve spring, dirty oil will be directed to the pumps. The strainer should be removed from the reservoir on a regular basis and cleaned. The strainer can be cleaned by blowing air from the inside out.

P916 Pump Assembly

There are two fixed displacement, vane type pumps located in the P916 pump assembly. The pump volumes, starting with the shaft end are 65 GPM and 34 GPM. The oil that is not used by the system will be ported through the no. N711 logic valve . There are two checks that can be made to test the pumps to insure that they are delivering the proper volume:

1. Compare the temperature of each pump housing and the suction line. If the pump is badly worn then the some of the oil will bypass the vanes and port plates. Anytime bypassing occurs in a hydraulic system, heat is generated. If the pump housing is a great deal warmer or hotter than the suction line then the pump cartridge is most likely bad and should be changed.

2. Check the current of the electric motor. The amperage that the motor draws depends on the pressure (PSI) and volume (GPM) that the pumps deliver. If the pumps are delivering less oil, then the current will drop on the electric motor. A good rule of thumb to remember is that it takes 1 horsepower to pump 1 GPM at 1500 PSI. A record should be made of the current level when the system is operating properly to establish a reference.

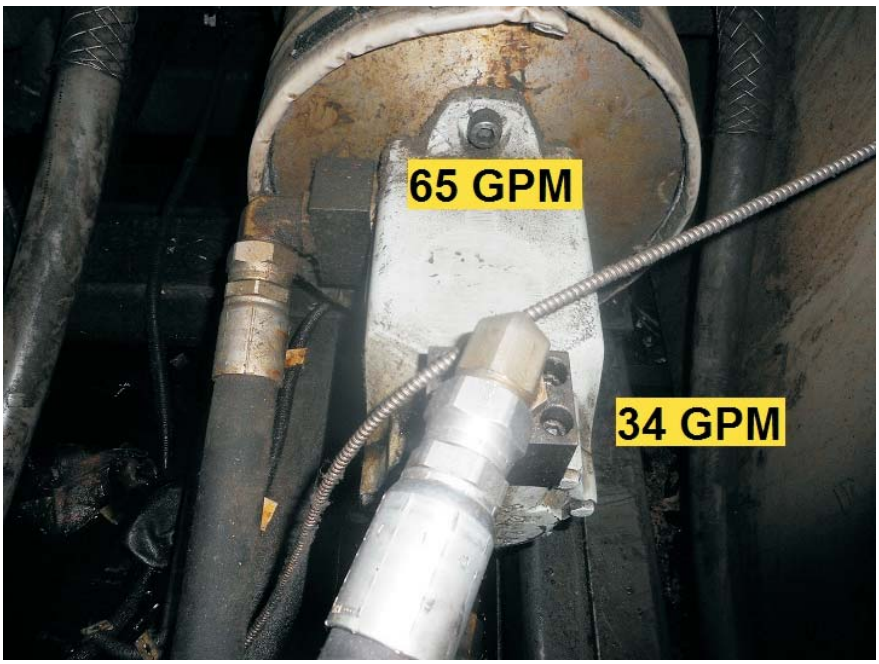

P916 Pump Assembly

P917 Suction Strainer

The strainer is located underneath the fluid level. The strainer will filter the large particles of contamination to the two pumps in the P916 assembly. If the strainer was to become contaminated then the pumps would cavitate. The pumps will have a high pitched whining sound when cavitating. Some strainers have a built in, 2 or 3 PSI check valve. If this is the case, the pumps will not develop the high pitched whining sound. When the vacuum pressure in the suction line reaches the rating of the check valve spring, dirty oil will be directed to the pumps. The strainer should be removed from the reservoir on a regular basis and cleaned. The strainer can be cleaned by blowing air from the inside out.

P925 Heat Exchanger

The oil that exhausts out of the Extruder motor, Injection cylinders and all lines marked “T” on the schematic are ported through this water cooler before returning to the tank. The oil flows over the tubes inside the shell. The water flow is ported through the tubes in the opposite direction. The heat in the oil is transferred from the oil to the water. To achieve the most efficient heat transfer the water flow should be 25% of the oil flow. The water flow is controlled by the P214 electrical solenoid valve. When the valve solenoid is energized water is ported through the tubes. For cleaning, circulating hot wash oil or light distillate through the tube side and / or shell side will usually effectively remove sludge or similar soft deposits. Soft salt deposits may be washed out by circulating hot fresh water. Some cleaning compounds such as “Oakite” or Dowell” may be effective in removing more stubborn deposits.

P925 Heat Exchanger

R708 Pilot Relief Valve

When the P908 pump volume and the P913 13 GPM pump cartridge volume is required in the system, the A165 solenoid is energized. Pressure will build up on top of the logic valve because of the pipe plug in the “B” port of the directional valve. The valve will shift and remain closed until the sum total of the logic spring (4 bar), R708 spring setting (200 PSI) and the electrically selected pressure of the A189 pilot relief valve is reached. When this pressure is reached, the logic piston will shift open and port all or part of the pumps’ volumes back to the tank.

If this valve fails open, then the logic valve will open at a lower pressure. The valve can be taken apart and checked for contamination, bad seals, wear and a broken spring.

R709 Pilot Relief Valve

When the P913 65 GPM pump cartridge volume is required in the system, the A163 solenoid is energized. Pressure will build up on top of the logic valve because of the pipe plug in the “B” port of the directional valve. The valve will shift and remain closed until the sum total of the logic spring (4 bar), R709 spring setting (200 PSI) and the electrically selected pressure of the A189 pilot relief valve is reached. When this pressure is reached, the logic piston will shift open and port all or part of the pump’s volume back to the tank.

If this valve fails open, then the logic valve will open at a lower pressure. The valve can be taken apart and checked for contamination, bad seals, wear and a broken spring.

R710 Pilot Relief Valve

When the P913 43 GPM pump cartridge volume is required in the system, the A164 solenoid is energized. Pressure will build up on top of the logic valve because of the pipe plug in the “B” port of the directional valve. The valve will shift and remain closed until the sum total of the logic spring (4 bar), R710 spring setting (200 PSI) and the electrically selected pressure of the A189 pilot relief valve is reached. When this pressure is reached, the logic piston will shift open and port all or part of the pump’s volume back to the tank.

If this valve fails open, then the logic valve will open at a lower pressure. The valve can be taken apart and checked for contamination, bad seals, wear and a broken spring.

R711 Pilot Relief Valve

When the P916 pump volume is required in the system, the A166 solenoid is energized. Pressure will build up on top of the logic valve because of the pipe plug in the “B” port of the directional valve. The valve will shift and remain closed until the sum total of the logic spring (4 bar), R711 spring setting (200 PSI) and the electrically selected pressure of the A189 pilot relief valve is reached. When this pressure is reached, the logic piston will shift open and port all or part of the pumps’ volumes back to the tank.

If this valve fails open, then the logic valve will open at a lower pressure. The valve can be taken apart and checked for contamination, bad seals, wear and a broken spring.

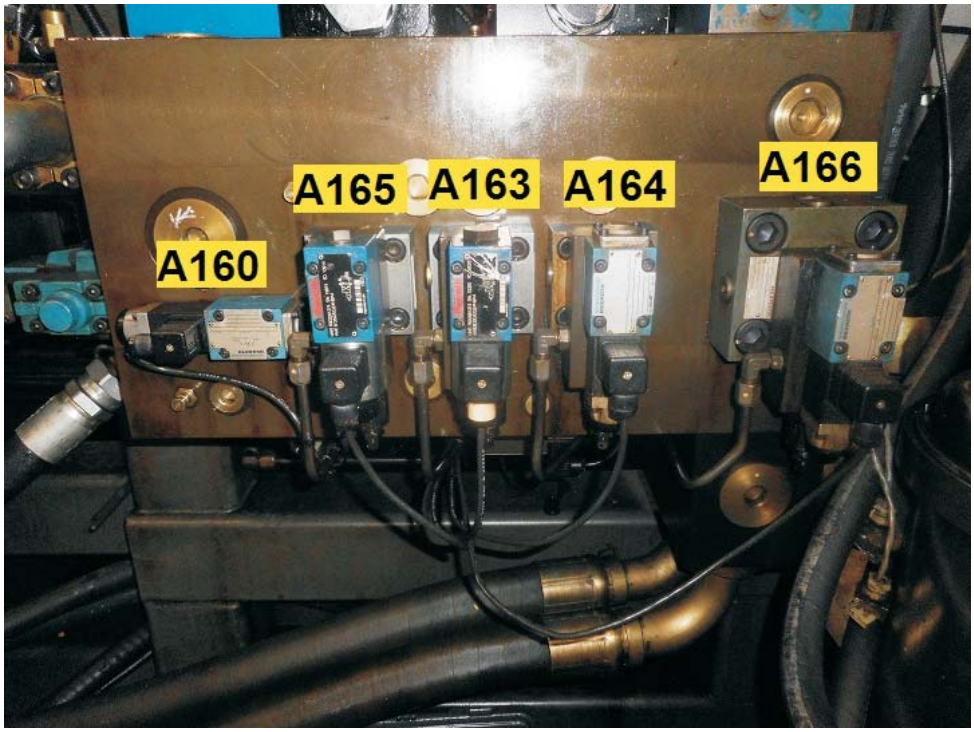

Pumps' Control Valves

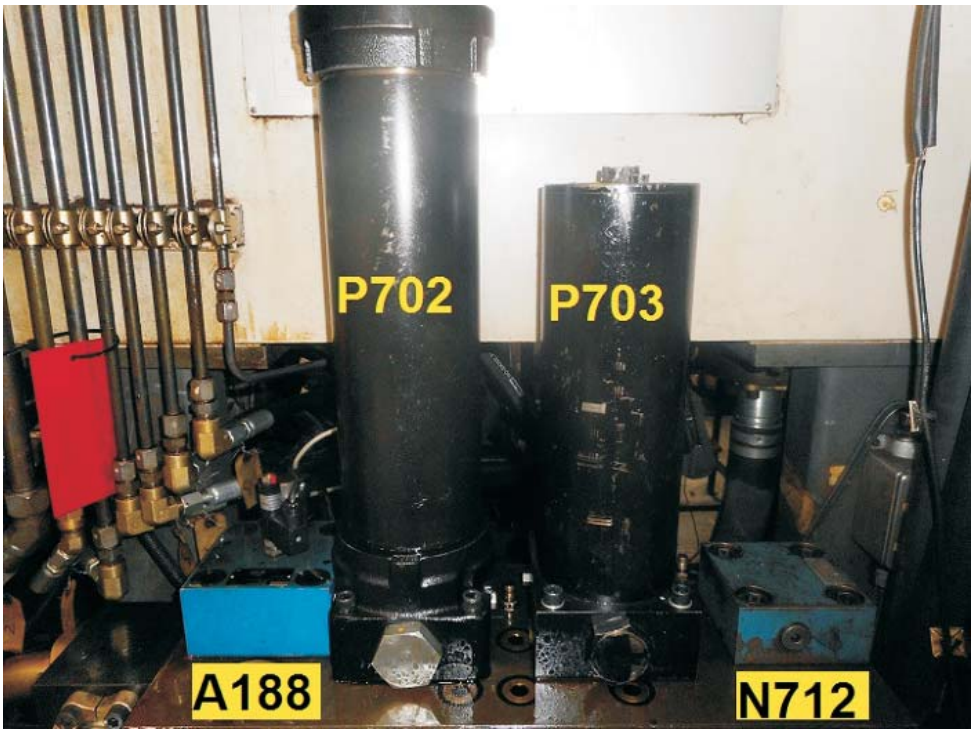

Filters & Valves

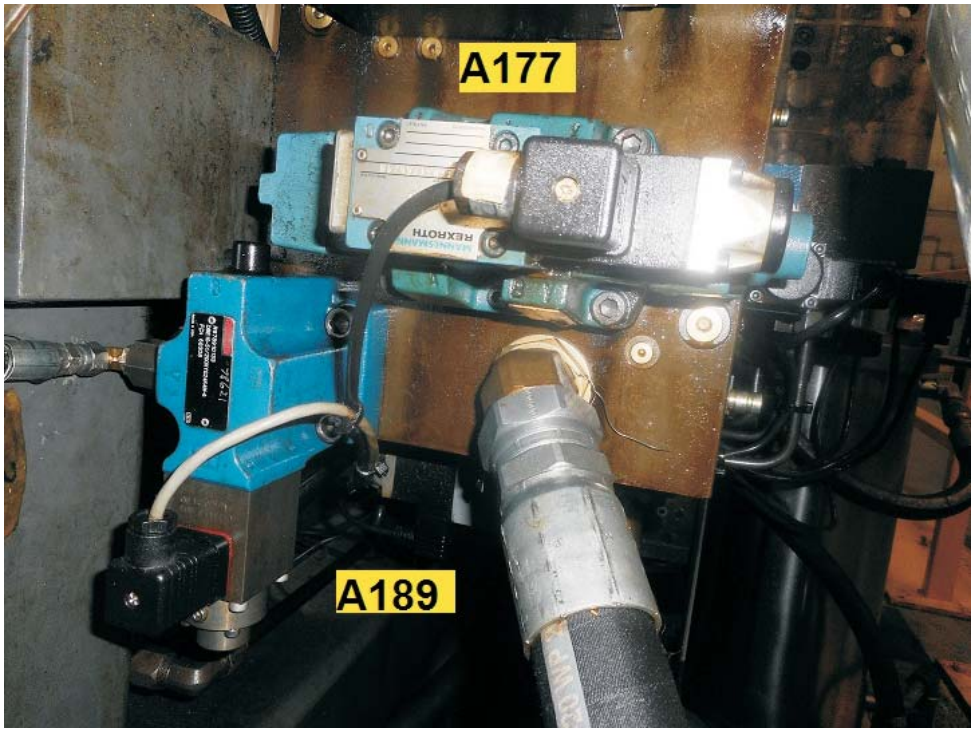

A177 & A189 Valves

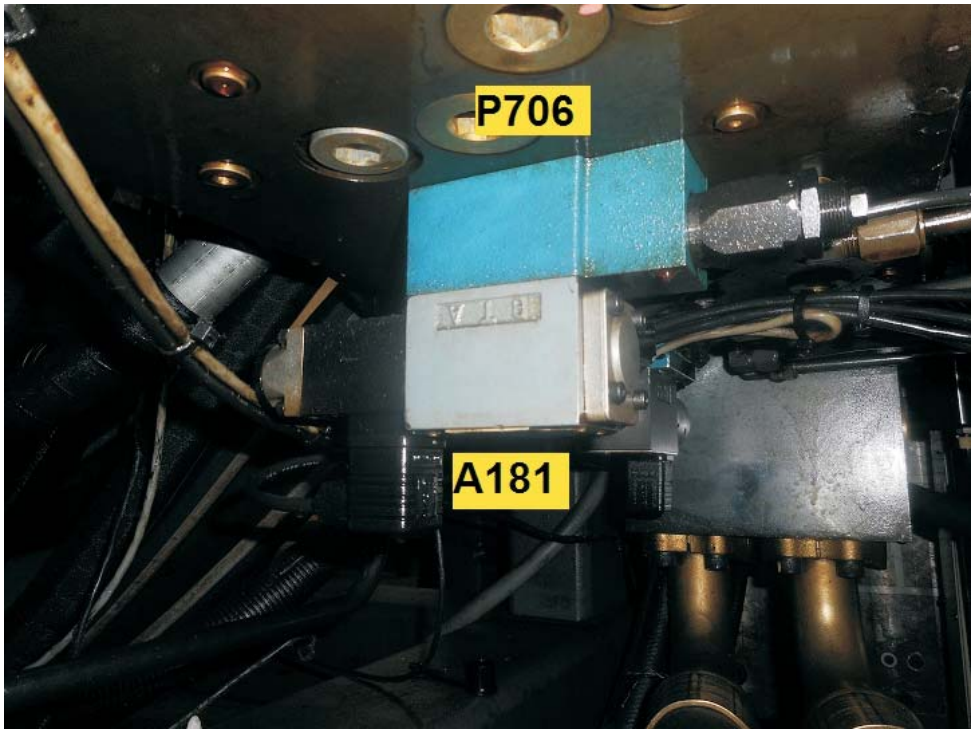

A181 & P706 Valves

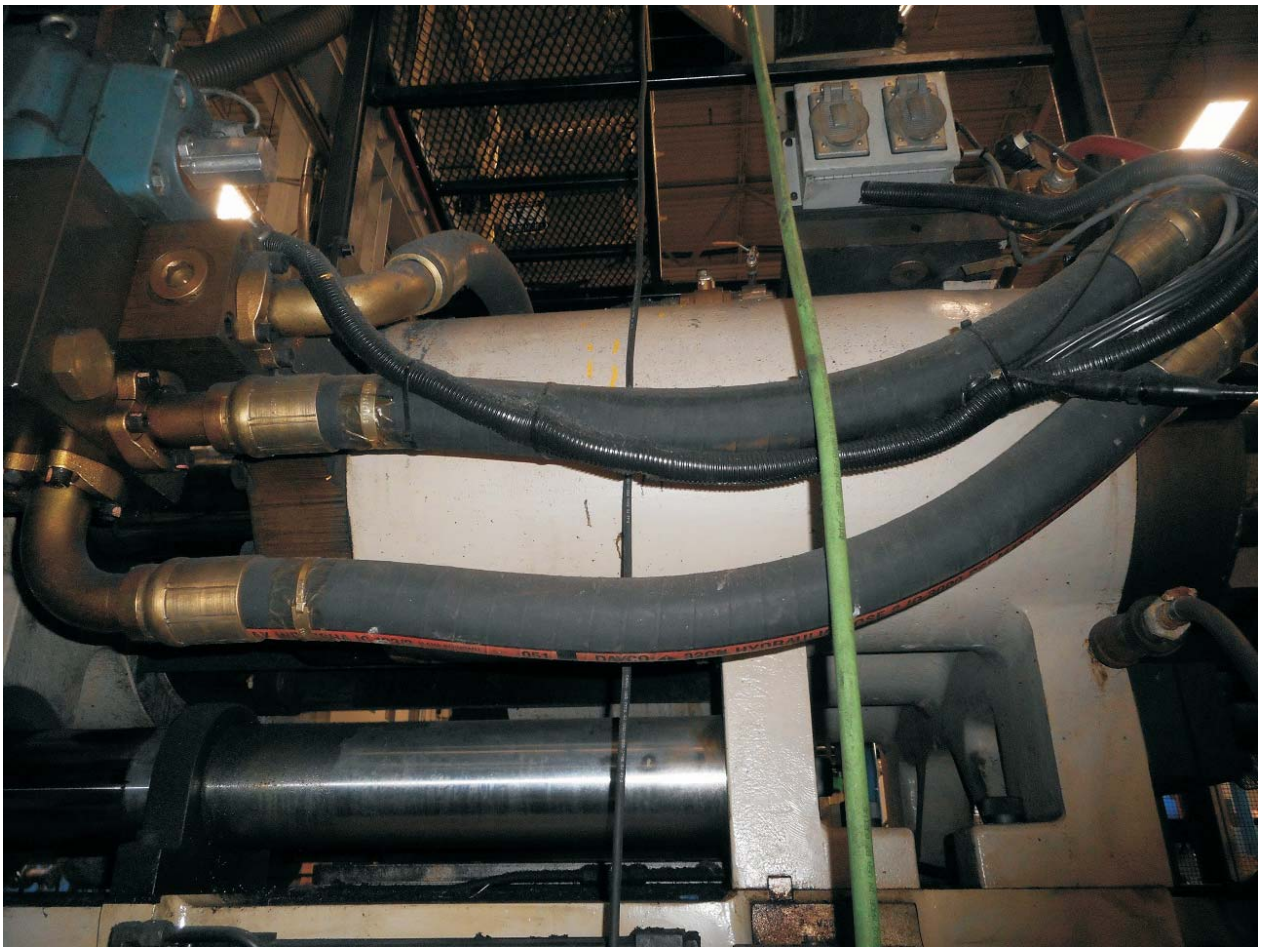

Injection Cylinder

Extruder Motor and Injection Cylinders

Power Off

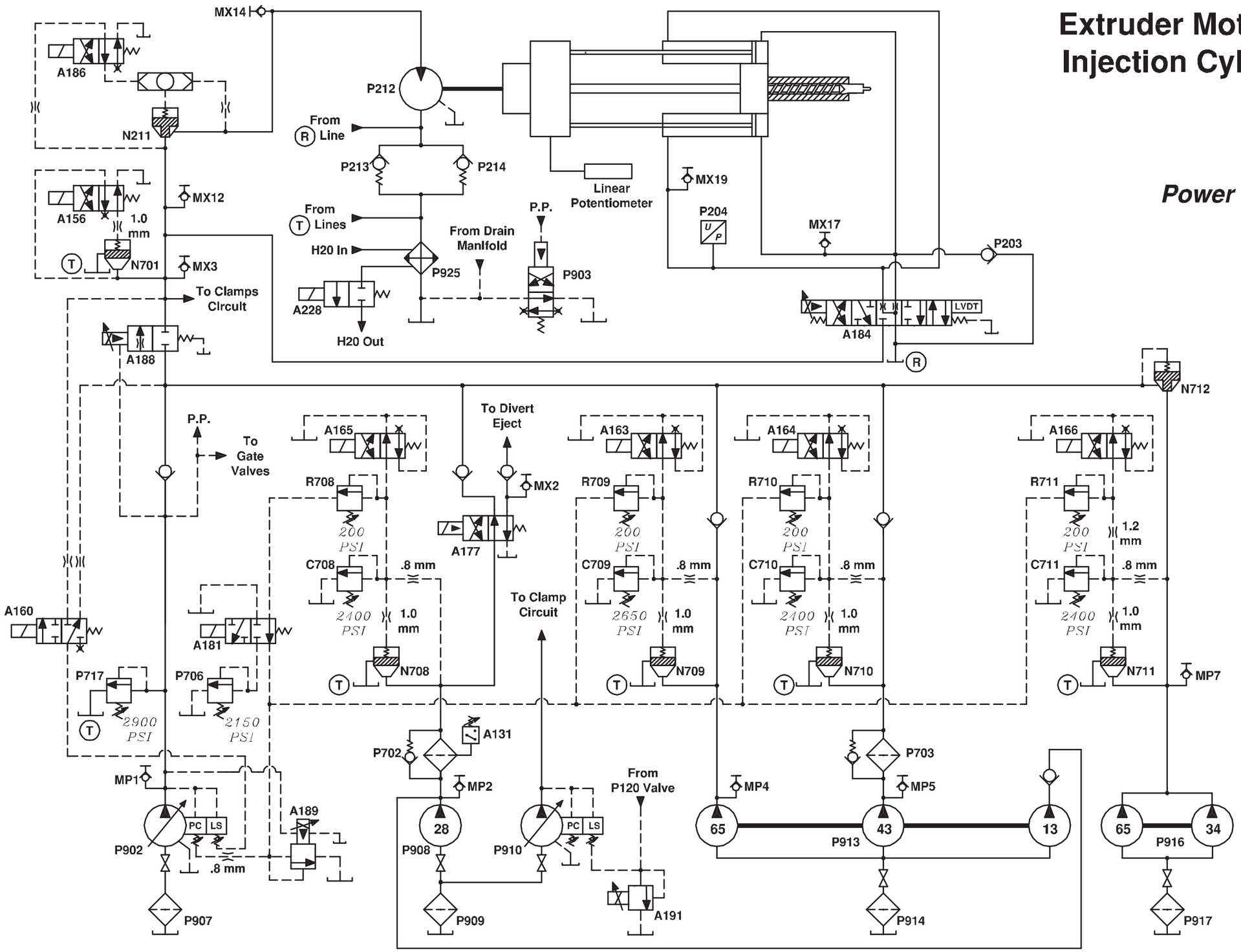

Extruder Motor and Injection Cylinders

Idle

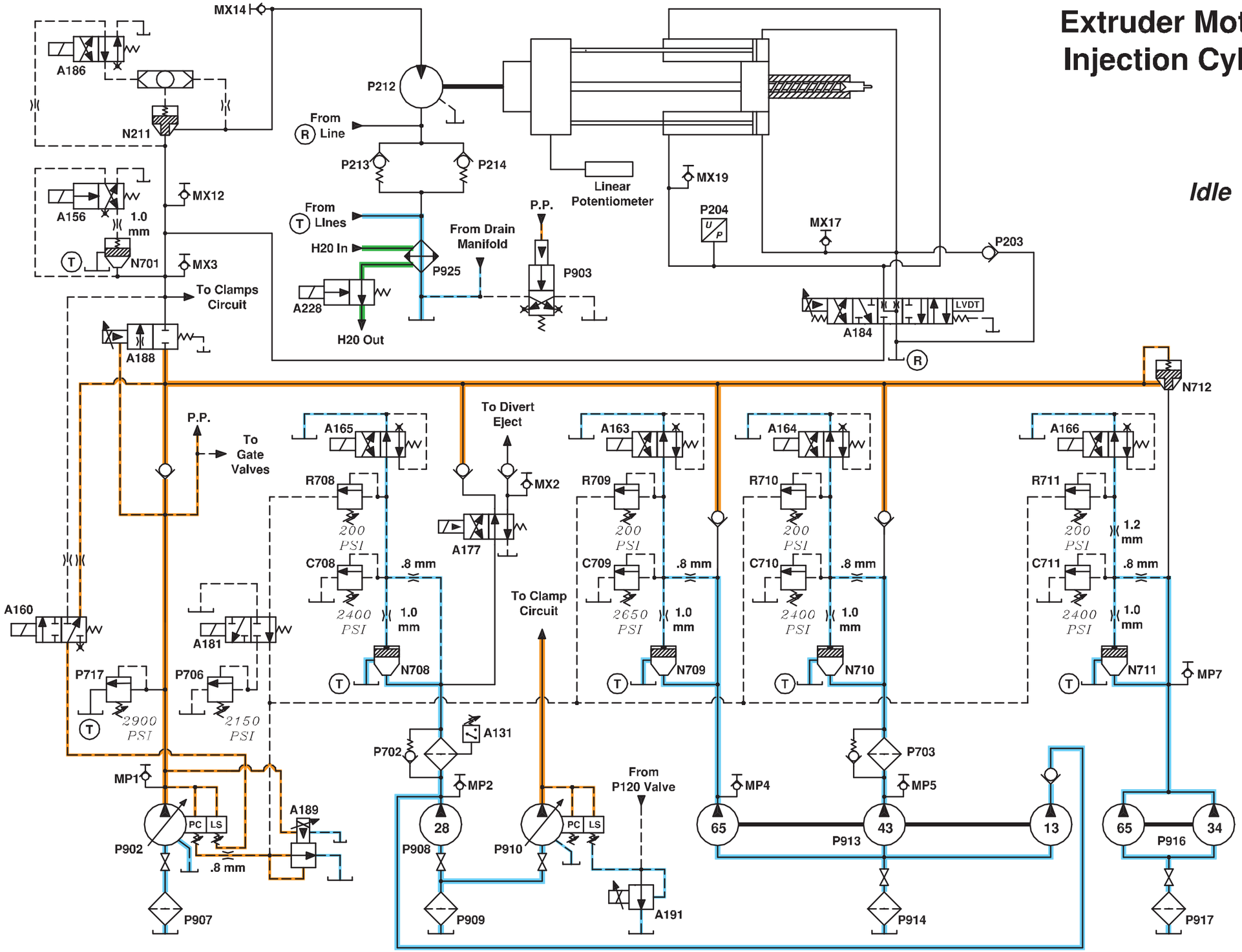

Extruder Motor and Injection Cylinders

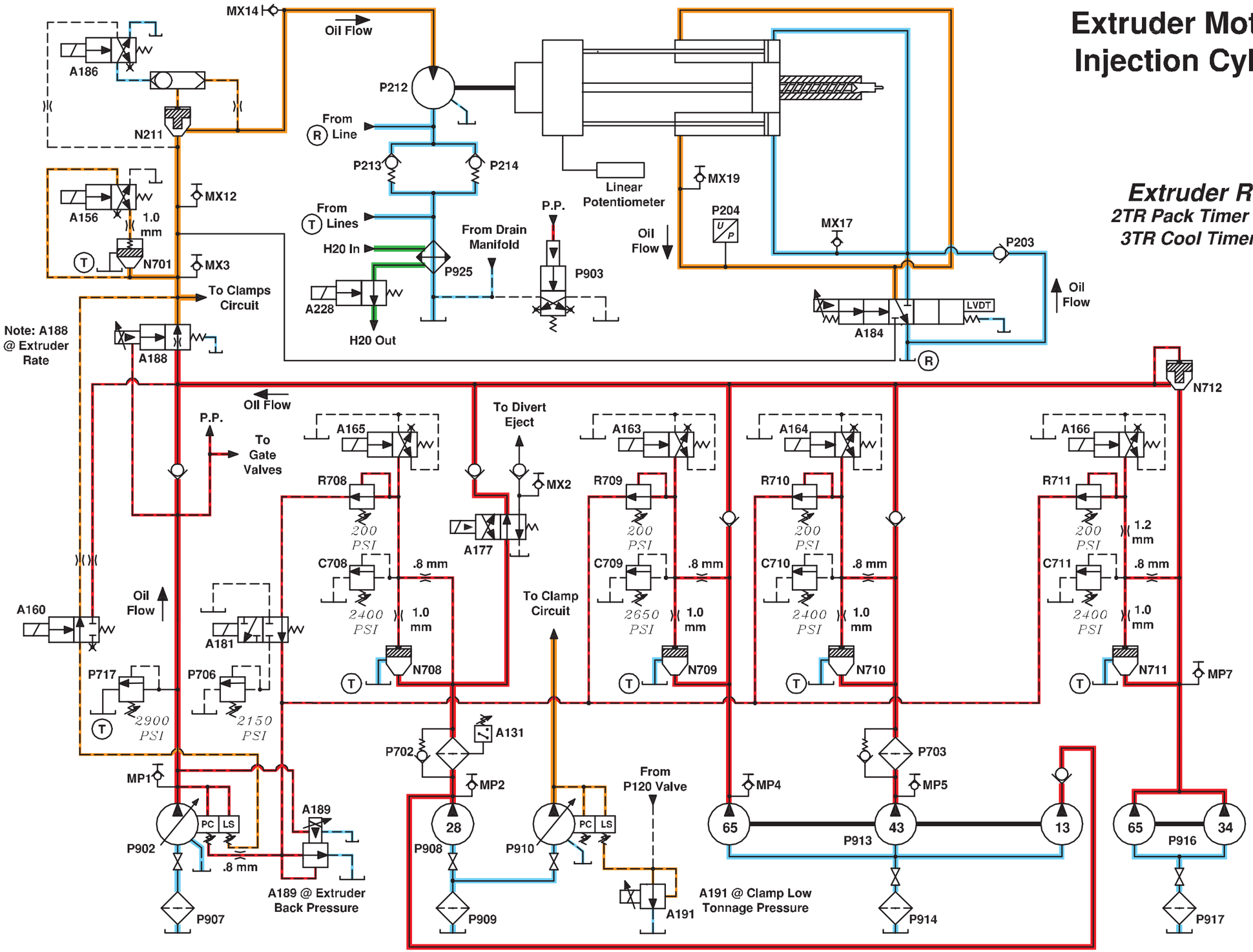

Extruder Motor and Injection Cylinders

Divert Pressure

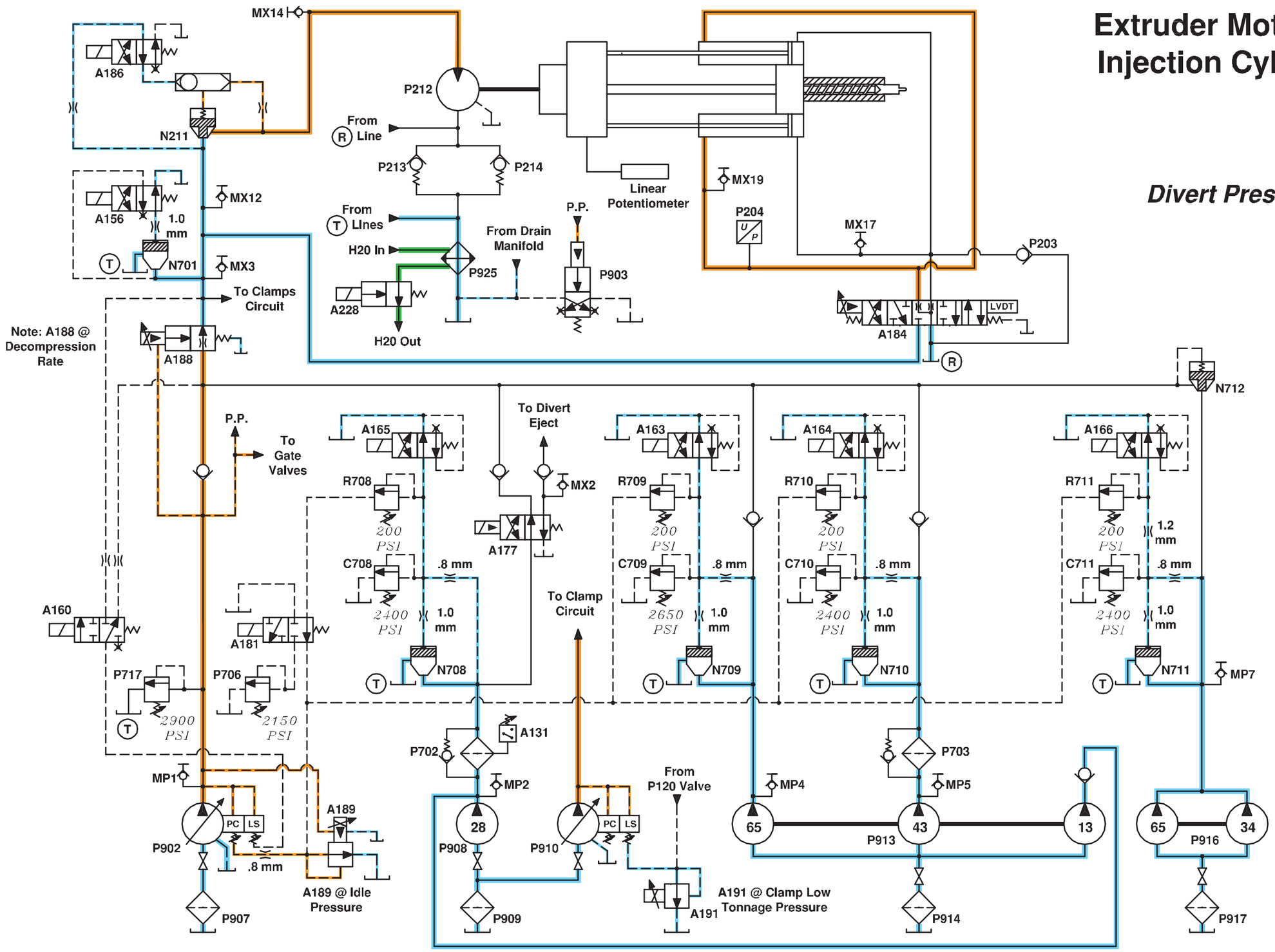

Extruder Motor and Injection Cylinders

Melt Decompression

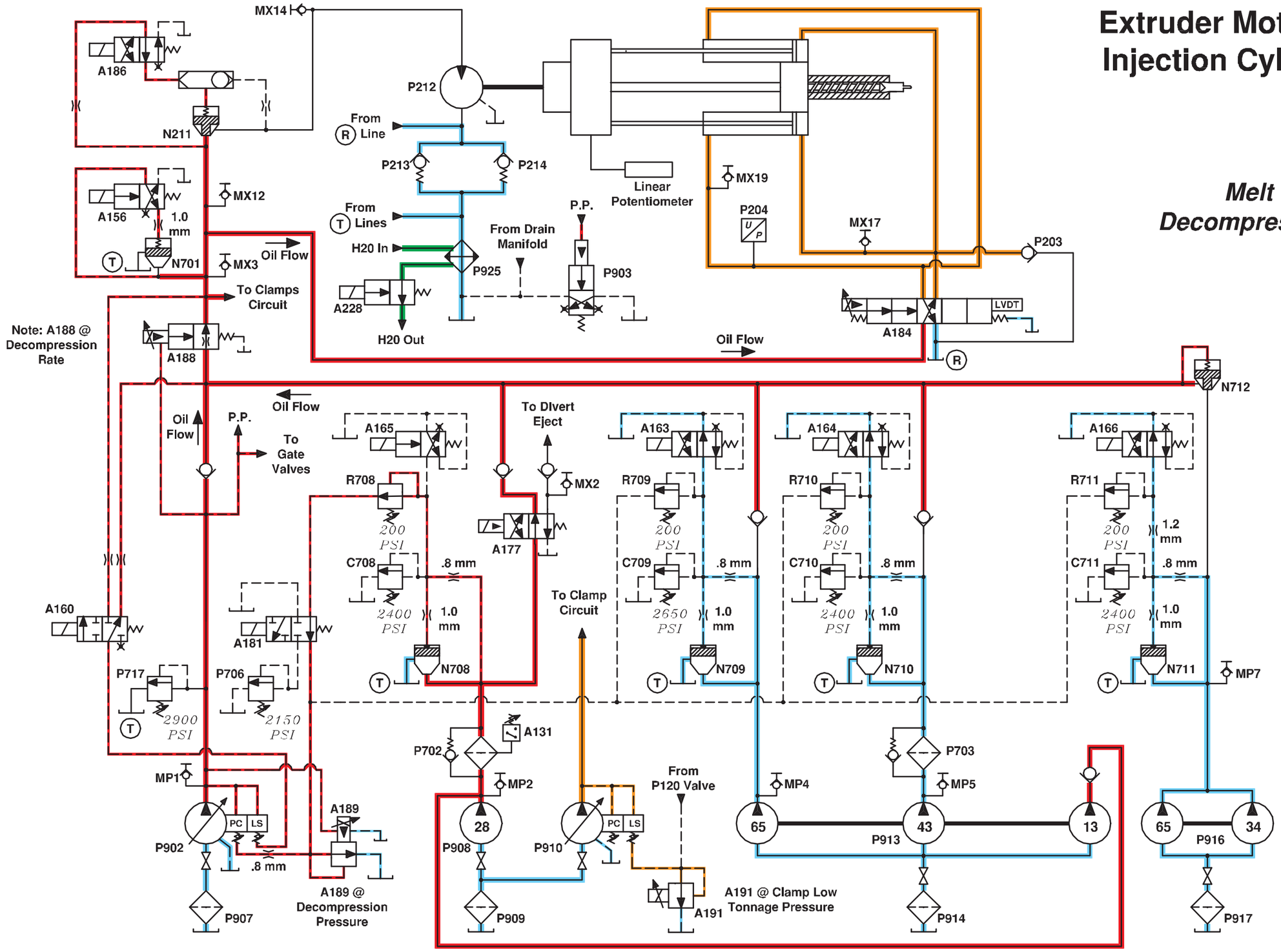

Extruder Motor and Injection Cylinders

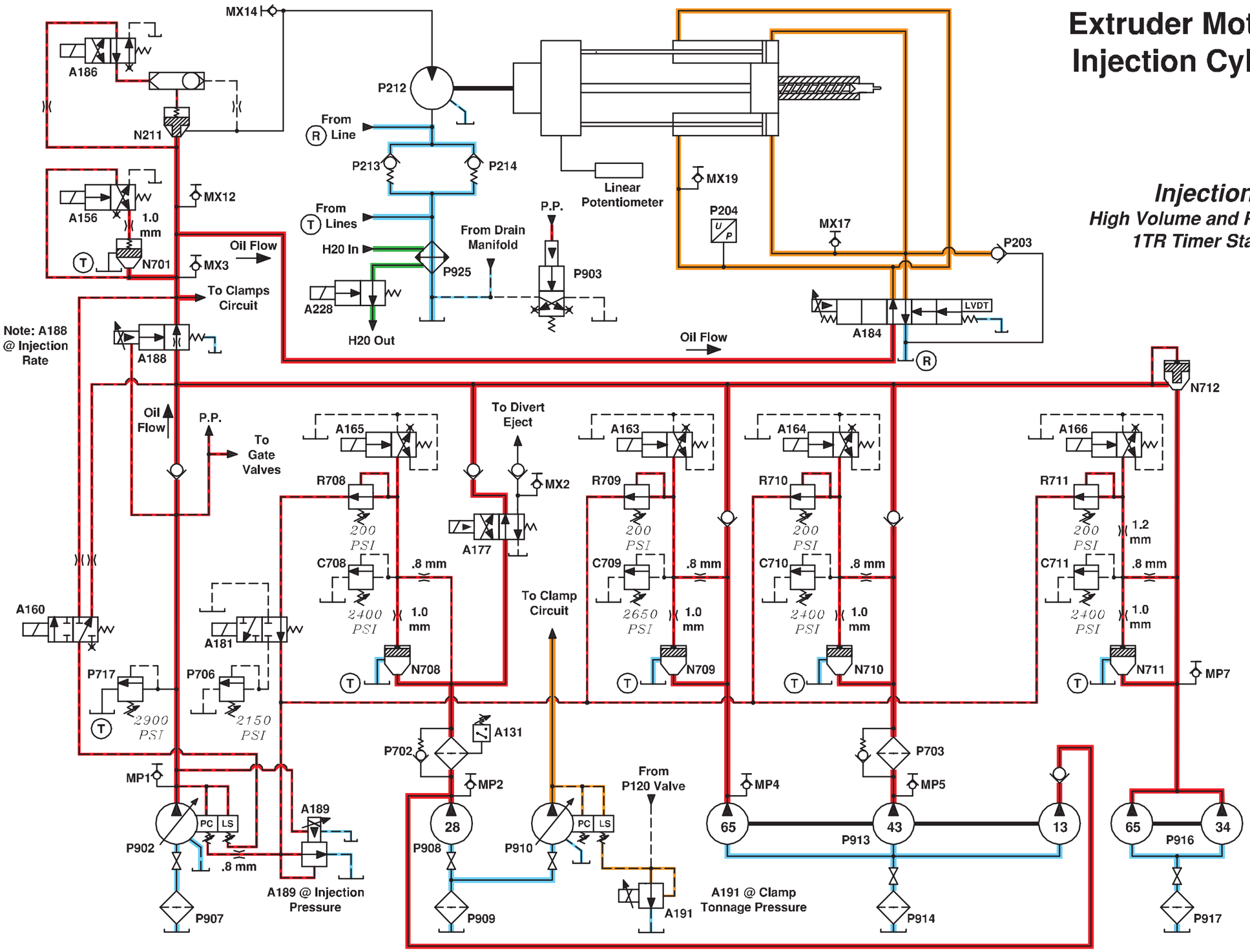

Extruder Motor and Injection Cylinders

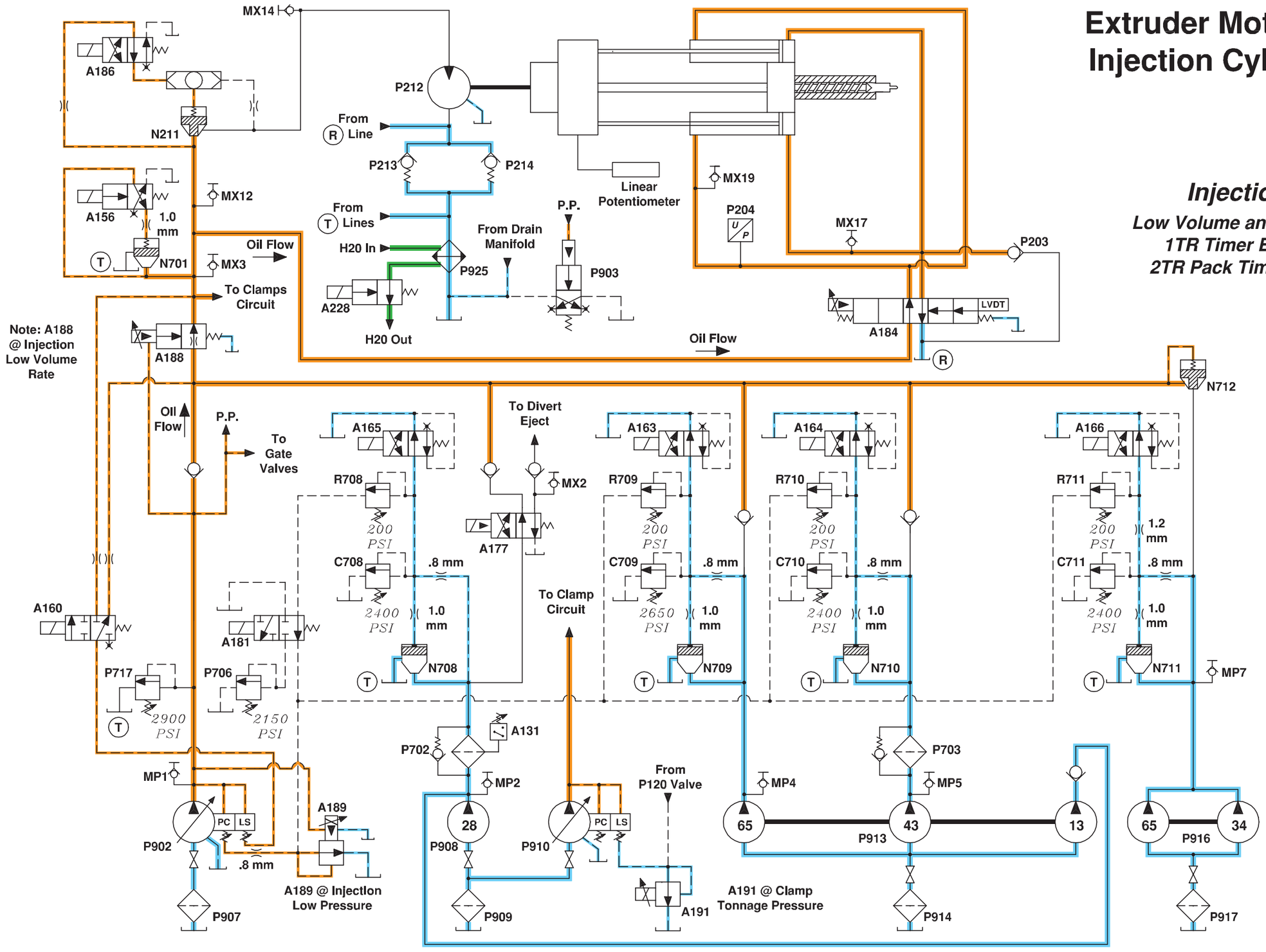

Injection

Low Volume and Pressure
1TR Timer Elapses
2TR Pack Timer Starts