Hydraulic Safety
“Unknown Dangers”

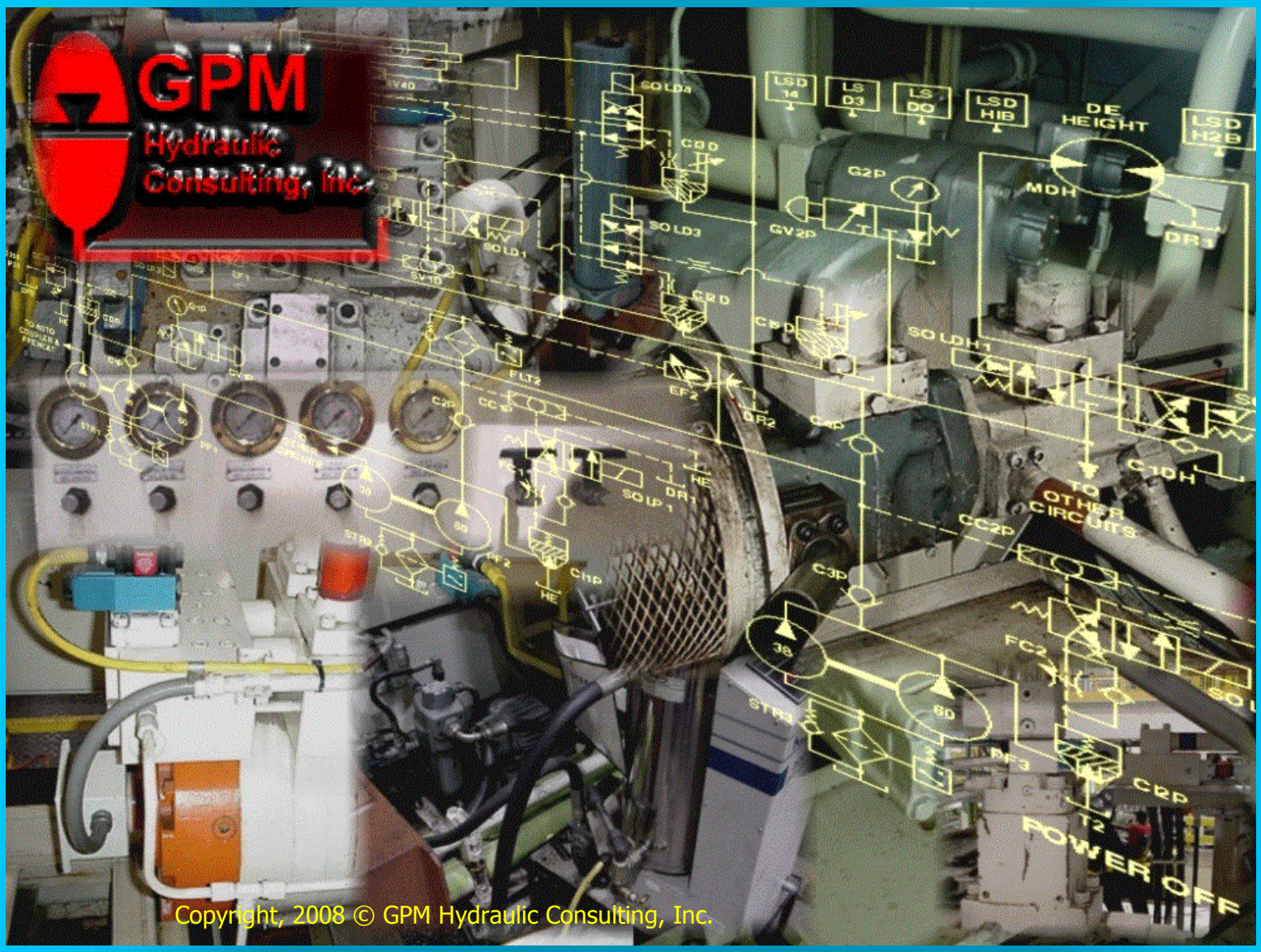

Atlanta (Monroe) GA
770-267-3787
gpm@gpmhydraulic.com
www.gpmhydraulic.com

Hydraulic Safety
"Unknown Dangers"

TABLE OF CONTENTS

Accumulators

Hydraulic accumulators are used to store pressurized hydraulic fluid. The accumulator performs the same function in a hydraulic circuit that a capacitor does in an electrical circuit. Dry nitrogen is used to “pre-charge” one side of the accumulator. A piston or some type of rubber element (bladder or diaphragm) is used to separate the hydraulic fluid and the nitrogen.

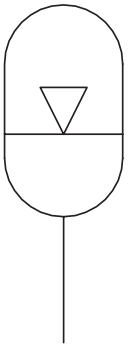

Accumulators primarily will perform two functions in the hydraulic circuit:

1) **Supply additional oil flow to the system at a very fast rate.** The accumulator amd pump volumes are combined together to rapidly cycle hydraulic cylnders.

2) **Absorb shock.** Hydraulic oil flows through the system at a rate of approximately 20 feet per second. When a cylinder piston bottoms out or a valve is rapidly closed, shock occurs in the system.

Dry Nitrogen

Dry nitrogen is used to pre-charge accumulators because it is an inert gas. Although any inert gas can be used, nitrogen is cheaper because it is more readily available. 78% of the earth’s atmosphere is nitrogen, 21% oxygen, and 1% is made up of Argon and other gases. An inert gas will not react readily with other chemicals. **Oxygen or compressed air should never be used to pre-charge an accumulator.** As oxygen is compressed it heats up and can cause a fire or explosion when mixing with the hydraulic oil.

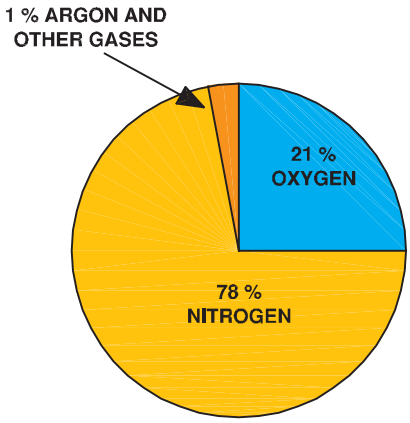

Charging the Accumulator with Nitrogen

In order for the accumulator to deliver the right amount of oil, the nitrogen pre-charge pressure must be correct. **A good rule of thumb is to pre-charge to half the maximum system pressure.** In systems using pressure compensating pumps, the maximum system pressure is determined by the compensator setting. The relief valve setting determines maximum system pressure in fixed displacement pump circuits (see pg. 20). This rule of thumb applies only to accumulators used for volume. Accumulators used for shock require a different pre-charge and are discussed later in this section.

In the example shown, the compensator setting determines the maximum system pressure. The accumulator pre-charge in this system should be ½ of 2000 PSI or 1000 PSI.

To charge the accumulator, the pressure on the oil side should be bled down to 0 PSI. In the example circuit, valve No. 1 should be closed first, then valve No. 2 should be opened. If the hydraulic pump is turned off, valve No. 2 should still be opened allowing the oil pressure to drop to 0 PSI.

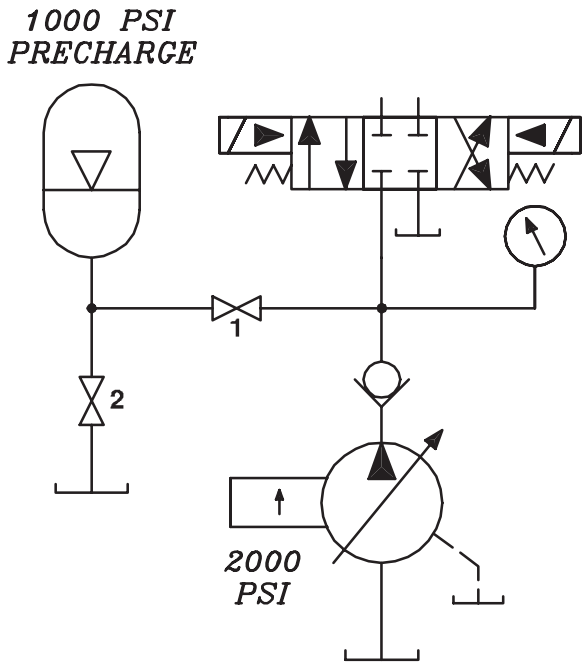

Once the hydraulic pressure is bled to 0 PSI (Figure 1), the protective valve cover on top of the accumulator can be removed. The gauge and charging rig are then installed onto the accumulator gas valve.

With the bleeder valve closed, turn the gas chuck handle clockwise. The pre-charge pressure should then be indicated on the pressure gauge. Cracking the bleeder valve open will relieve the nitrogen pressure to atmosphere if overcharged. Before charging a piston accumulator, bleed all the nitrogen off, as there may be oil build up on top of the piston due to bypassing(see pg. 12).

To charge with nitrogen turn the gas chuck handle counterclockwise. To vent the pressure out of the charging assembly open and then re-close the bleeder valve. Connect the hose from the nitrogen bottle to the charging rig.

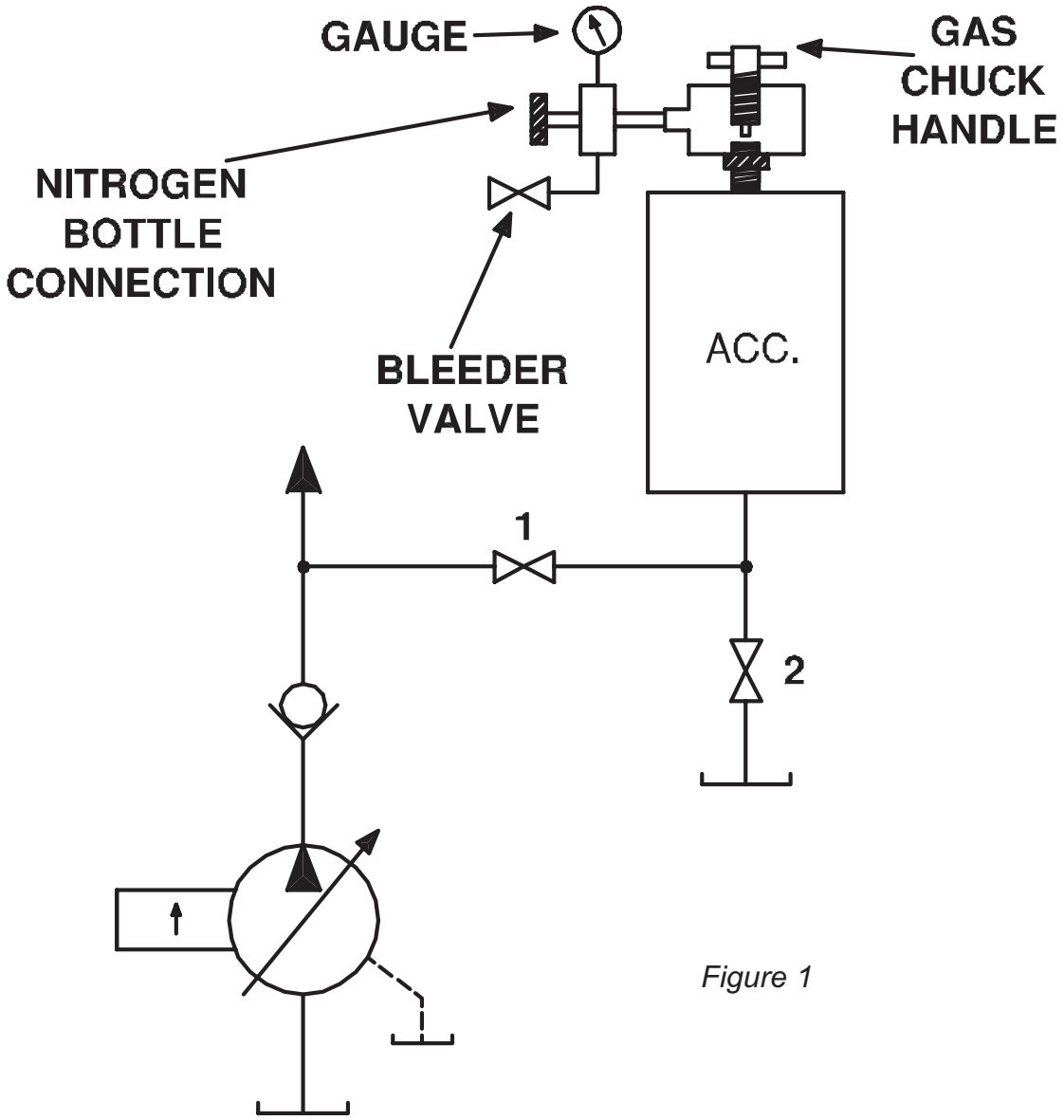

Figure 1

The bottles normally are originally pre-charged to 2200 PSI. With the nitrogen bottle gas valve closed, turn the gas chuck handle clockwise to depress the accumulator gas valve. Gradually open the valve on the nitrogen bottle. Set the regulator on the nitrogen bottle to the desired pressure. Close the nitrogen bottle gas valve when pre-charged to the proper pressure. After pre-charging, turn the gas chuck handle counterclockwise and open the bleeder valve to relieve the pressure in the hose. The hose and charging rig can now be removed. The accumulator gas valve cover should be replaced.

Checking the Nitrogen Pre-charge Hydraulically

Instead of attaching the charging rig for checking the pre-charge, a hydraulic method is available. When the pump is turned off, pressure is locked in the system.

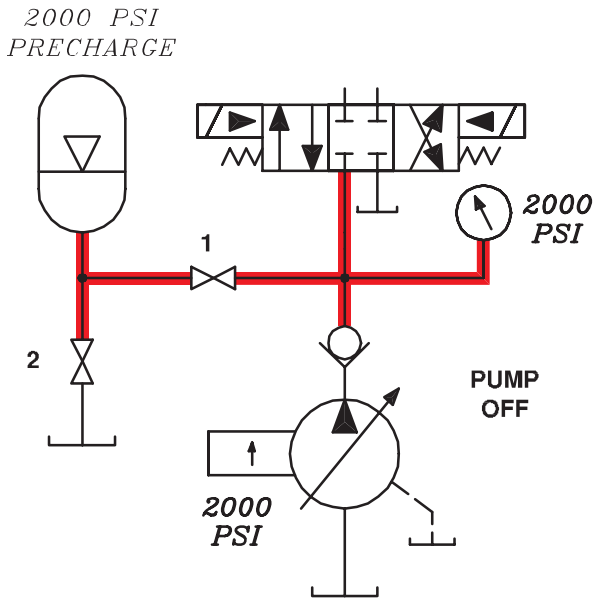

Open the No. 2 manual dump valve a small amount. The pressure in the system will slowly drop. The pressure will drop to a point, then rapidly 0 PSI. The pressure that it rapidly drops to 0 is the pre-charge pressure.

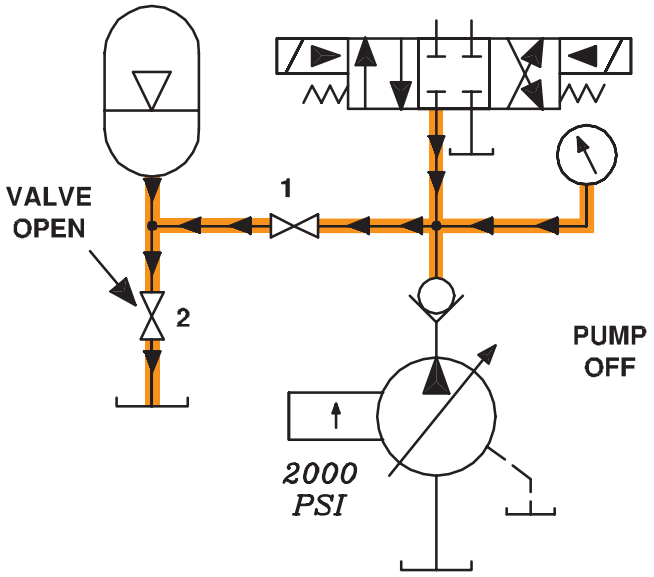

Types of Accumulators

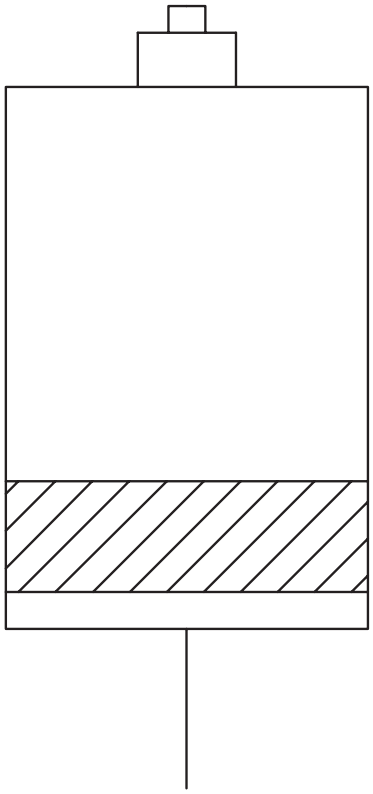

Piston

The piston accumulator is similar to a cylinder without the rod. The piston separates the nitrogen and oil. Piston types are usually used when larger accumulators are required. Although it can be mounted in any position, a vertical mounting is better. If mounted horizontal, the barrel will wear on the bottom side because of the weight of the piston and contamination.

In the example circuit, the pump is off and the ¼” hand valve is open. The nitrogen pre-charge pressure has forced the piston all the way to the bottom. Any oil in the accumulator is drained to tank through the ¼” dump valve.

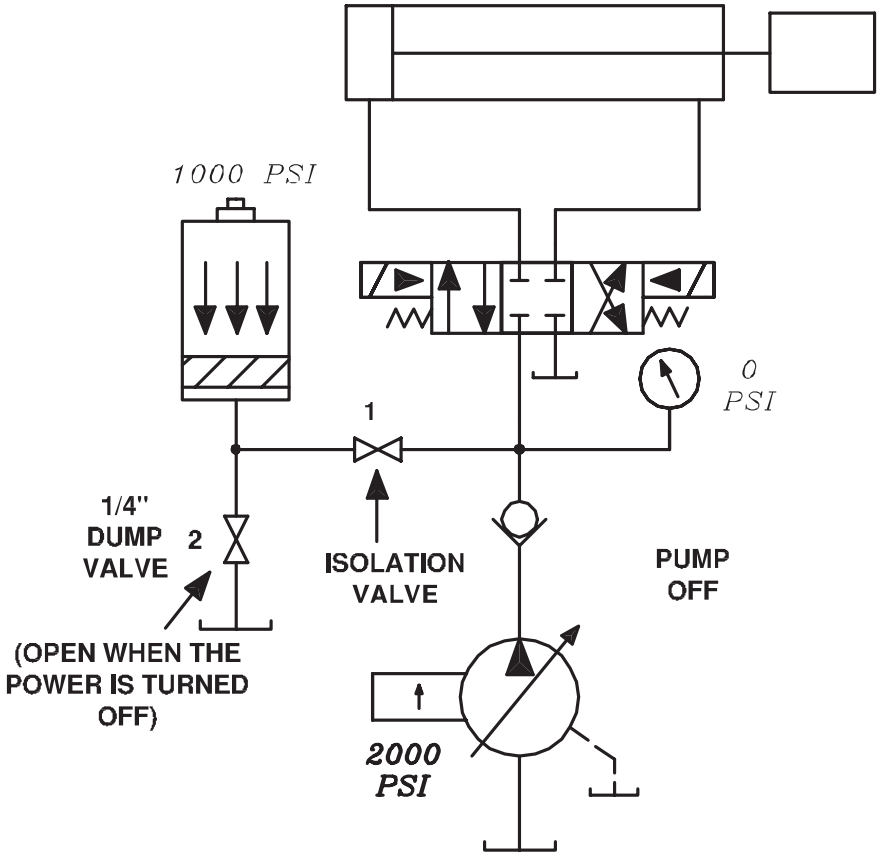

With the ¼" manual dump valve closed and the pump turned on, the pump volume will begin filling the accumulator. As the accumulator fills, the dry nitrogen is compressed. The pump will continue to fill and pressurize the accumulator until both the nitrogen and hydraulic pressures are 2000 PSI (pump compensator setting). At this point the accumulator is fully charged and the pump will compensate.

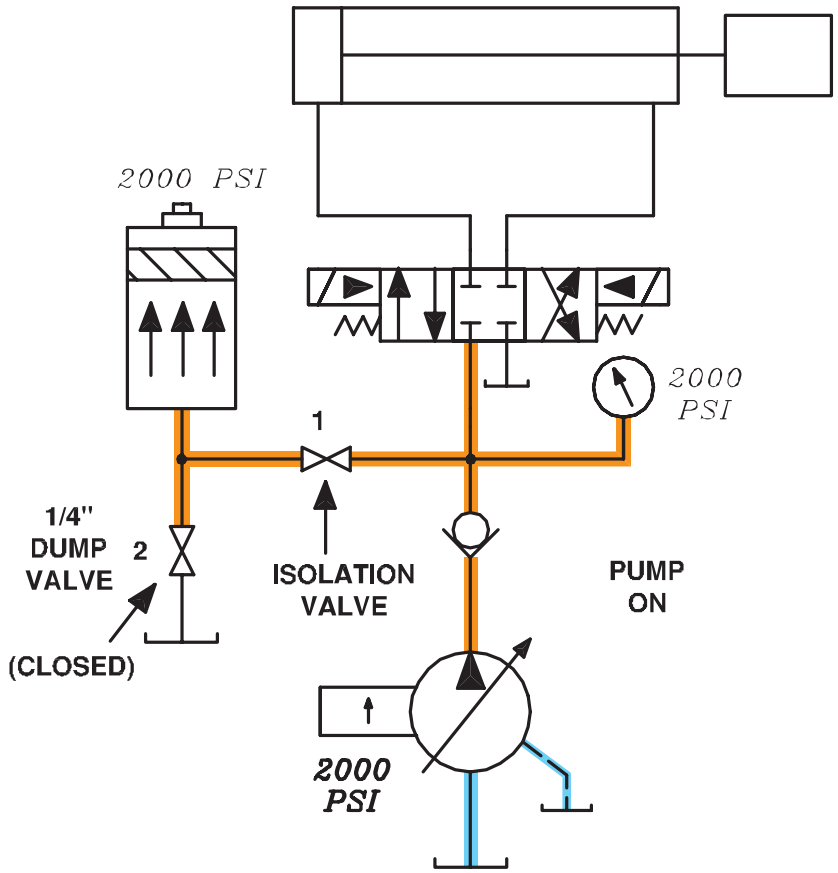

When the directional valve is energized in the “A” position, pressure in the system will drop. The pressure drops because it takes less than 2000 PSI to move the load. The dry nitrogen forces the oil out of the accumulator combining it with the pump volume. The oil is ported through the directional valve to move the load. When the cylinder piston fully bottoms out or the directional valve is de-energized the pump will again fill the accumulator.

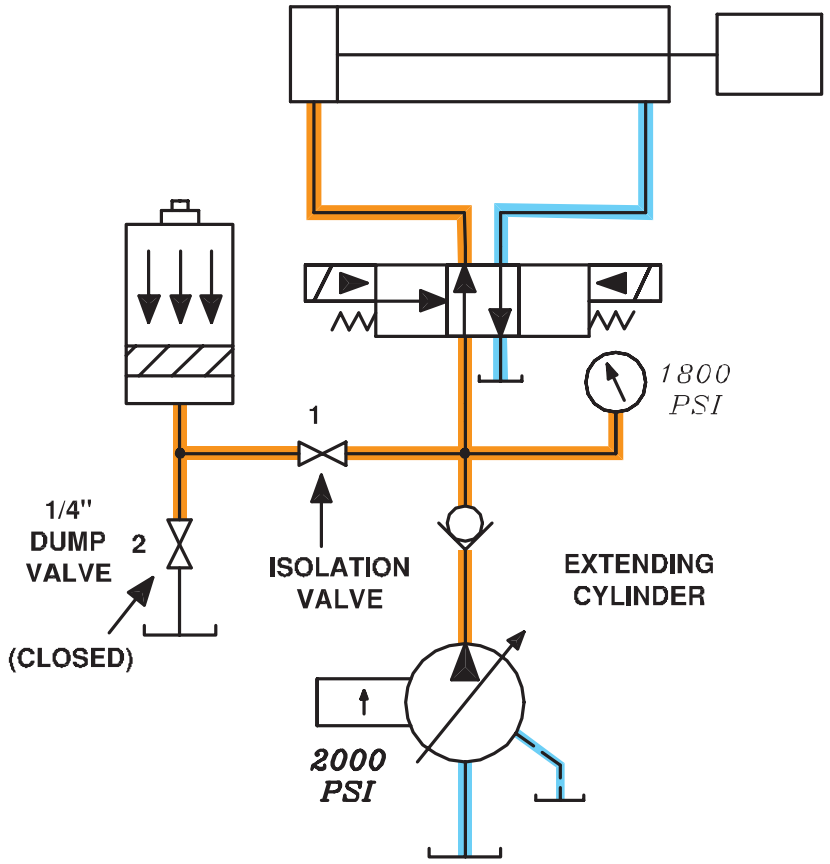

Bypassing Test and Piston Removal
To check for bypassing and to inspect the piston, install the charging rig. For easy removal of the piston it should be forced to the top. The following procedures will accomplish this easily and safely.

1. **With the pump on, open the No. 3 bleeder valve on the charging rig.** The nitrogen should be forced out of the top of the piston and the nitrogen pressure should drop to 0 PSI. On most charging rigs, the bleeder valve can be removed and a hose put in its place to prevent an oil spill.

2. **Close the No. 1 isolation valve.** The pump can also be turned off at this time.

3. **Open the ¼" manual dump valve (No. 2).** Hydraulic pressure in the accumulator will bleed back to tank. The piston should remain at the top due to the friction of the seals.

4. **Remove the charging rig and the top of the accumulator.** A puller can then be attached to the piston for removal.

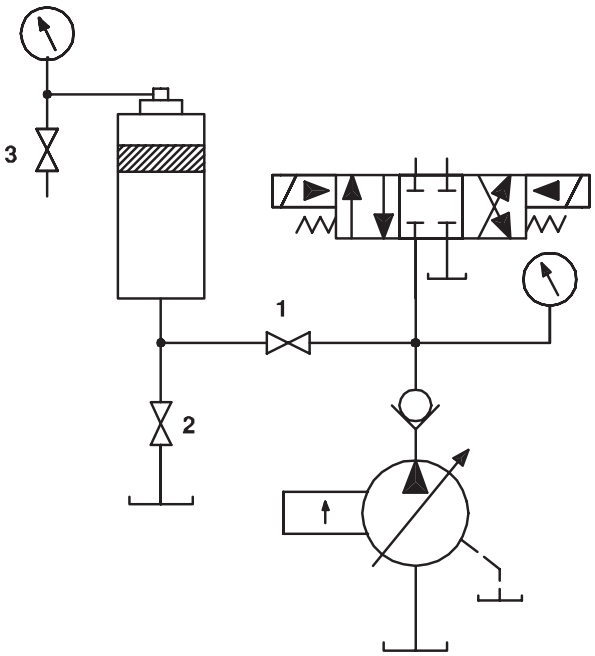

Bladder Accumulator

The bladder accumulator uses a thick rubber type balloon as the device that separates the oil from the nitrogen. Drawing “A” shows the bladder filled with nitrogen (1000 PSI). The expanded bladder is holding the poppet valve closed. The purpose of the poppet valve is to prevent the bladder from protruding into the piping and system.

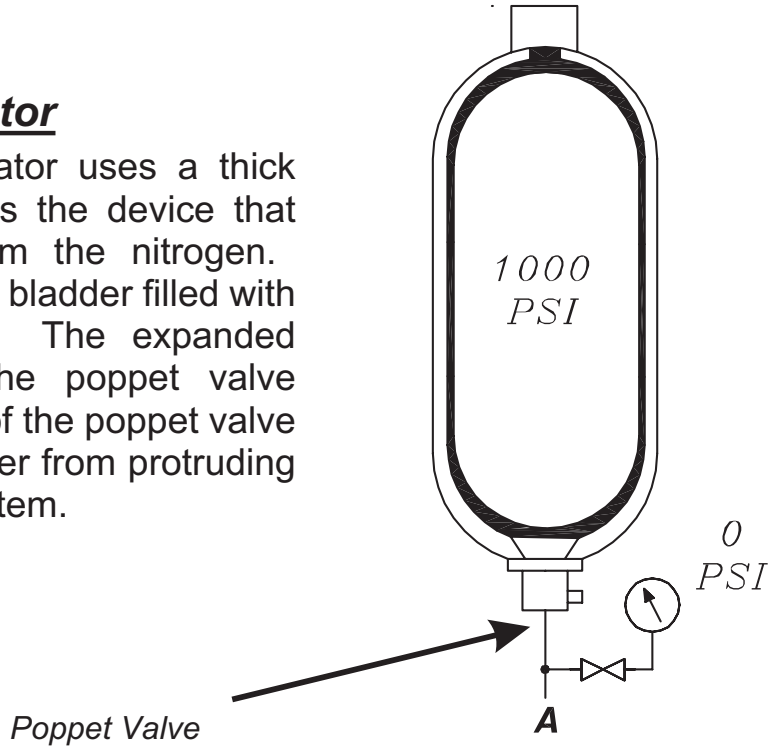

Bladder

In drawing “B”, the hydraulic pressure has compressed the nitrogen to the maximum system pressure (2000 PSI). The hydraulic and nitrogen pressures are equal at this point.

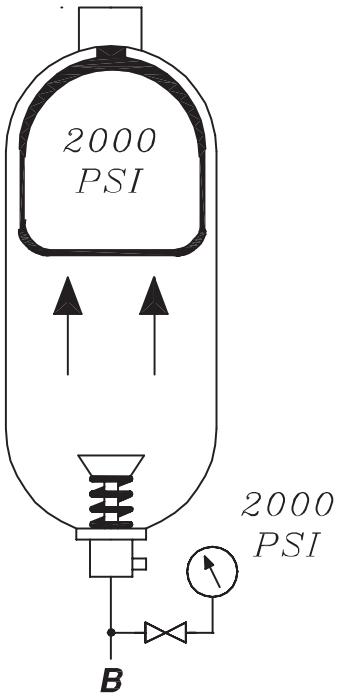

When the directional valves are energized to extend the cylinders (C), the hydraulic pressure drops. The nitrogen in the bladder forces the fluid out at a high rate of flow. In normal operation the bladder should not contact the poppet valve.

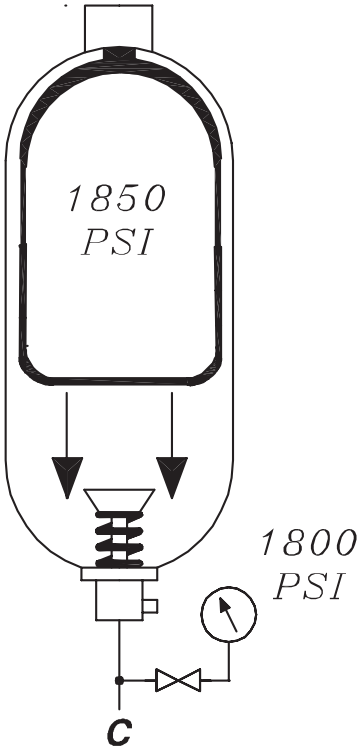

Replacing the Bladder for Bottom Repairable Accumulators

Install the charging rig to the bladder valve and release the nitrogen pre-charge. Insure that the hydraulic pumps have been locked out and the pressure has been bled down to 0 PSI prior to removing the accumulator from the machine. All oil should be drained before disconnecting the hydraulic lines.

Removing the Poppet Valve

1) Remove the accumulator and place on a work bench. Install the charging rig again to insure that the precharge has been released. It is always a good idea to remove the valve stem from the bladder. In some cases when the bladder ruptures and deflates, it will fold over inside trapping a small amount of nitrogen pressure.

2) Remove the nut, washers and the O-ring on the poppet valve assembly. You will also need to remove the smaller nut on the bladder.

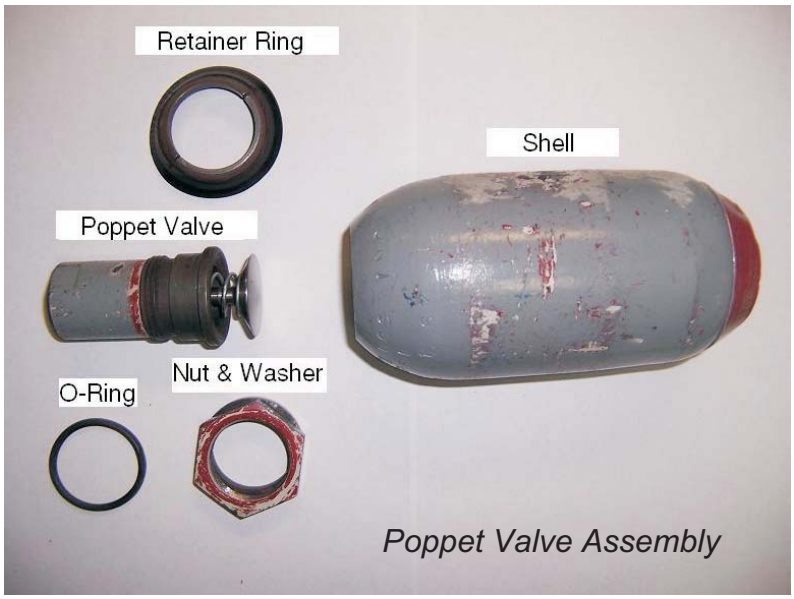

Poppet Valve Assembly

3) The poppet will have to be pushed inside the shell to remove the retainer ring. Sometimes the retainer will stick to the accumulator shell or the poppet valve. The retainer is designed to fold in half for removal. *The retainer ring will have to be removed before the poppet valve.*

Removing the Bladder

4) Once the poppet valve is removed, the bladder can be removed as well. *A 5-gallon bucket can be used to catch the oil that is inside the ruptured bladder.*

5) Prior to installing a new bladder, the inner shell should be cleaned. Also, inspect the old retainer ring for damage.

It is always best to replace the old retainer ring with a new one. There is a good possibility that the hydraulic system has over heated prior to removal. *Heat causes rubber to harden and get brittle.*

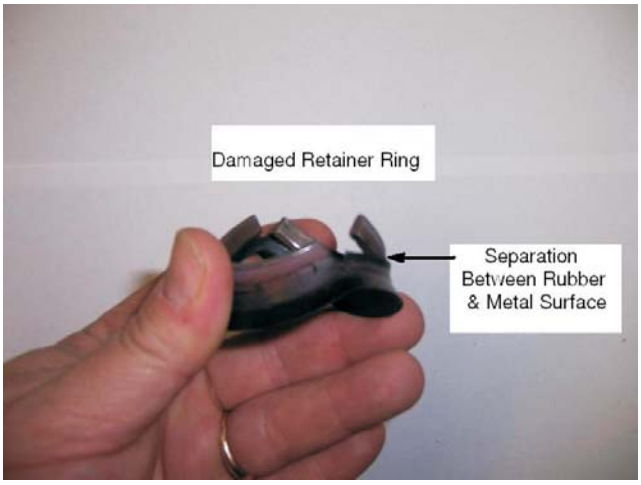

Damaged Retainer Ring

6) The inner shell of the accumulator and the bladder should be lubricated with hydraulic oil. This provides a slippery surface that will make it a little easier to install the new bladder. A threaded tool can be attached to the bladder to help pull the bladder into the shell.

7) The poppet valve assembly can now be installed in the reverse order. *Never pre-charge the accumulator in the shop. Install it first!* Slightly open the nitrogen bottle valve when initially pre-charging the first 50 PSI. Otherwise the cold nitrogen introduced quickly can cause the rubber to become brittle and rupture.

Accumulator Dump Valves

A circuit using a hydraulic accumulator must have a method of bleeding the pressure down when the system is turned off. All accumulator systems should use a manual or automatic dump valve to accomplish this. If the pressure is not bled down then the accumulator will remain charged over a period of time. **Prior to working on the system you should verify that the pressure is bled down by observing the pressure gauge when the machine is turned off.**

In some cases, the electric motor is turned off, however control power to the system directional valves remains on. If a photocell, limit switch, or proximity switch is made accidentally, the directional valve can shift causing the cylinder to move.

Manual Dump Valve

The manual dump valve is normally a small valve, ¼" or less. Anytime the pump is turned off and maintenance is performed, the valve should be opened.

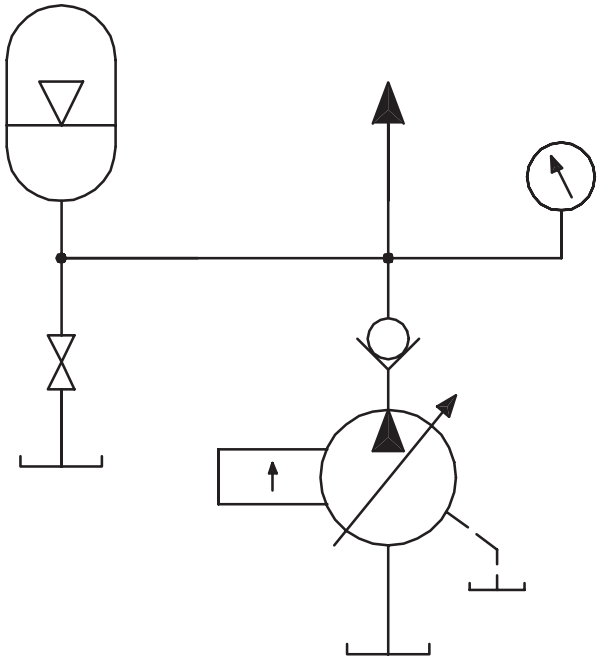

Solenoid Operated Dump Valve

The solenoid on the normally open dump valve is usually wired in to the electric motor starter. When the motor is started the valve will shift closed, blocking flow back to the tank. When the pump is turned off, electrical power is removed from the dump valve solenoid. The valve spool will then spring return to the open position. The pressurized fluid in the accumulator will automatically bleed to tank through the dump valve.

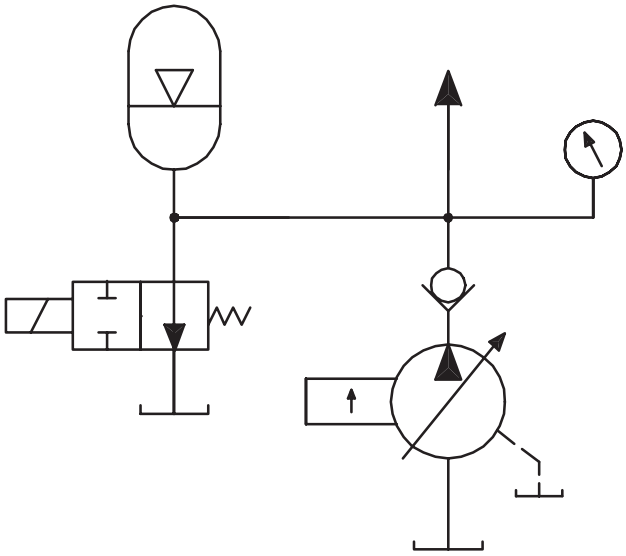

Pilot to Close Check Valve

When the pump is turned on, pilot pressure plus the spring pressure holds the valve closed. Flow is then blocked back to tank. When the pump is turned off, pressure in the pilot line will bleed down through the internal clearances inside the pump. Pressurized fluid in the accumulator will shift the valve open, dumping the oil back to tank.

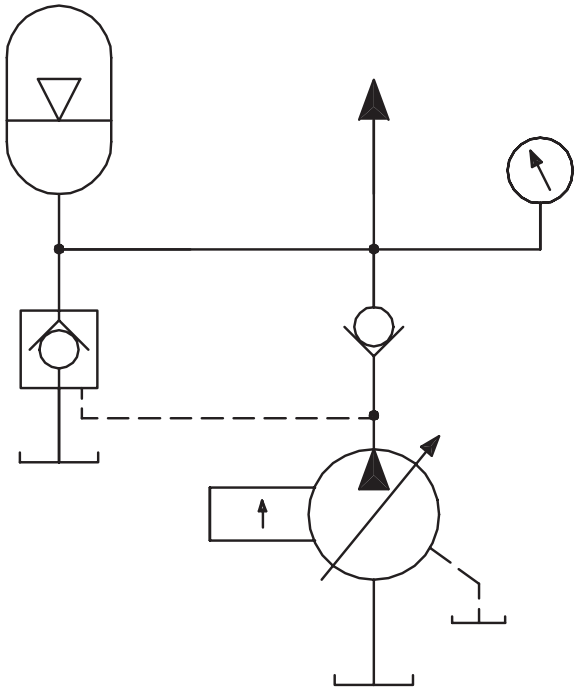

Differential Dump Valve

The valve is shifted open and closed by hydraulic pressure. The pilot pressure taken immediately downstream from the pump acts on a much larger area than does the pilot pressure that is sensed from the accumulator. The area difference is usually a 4:1 ratio.

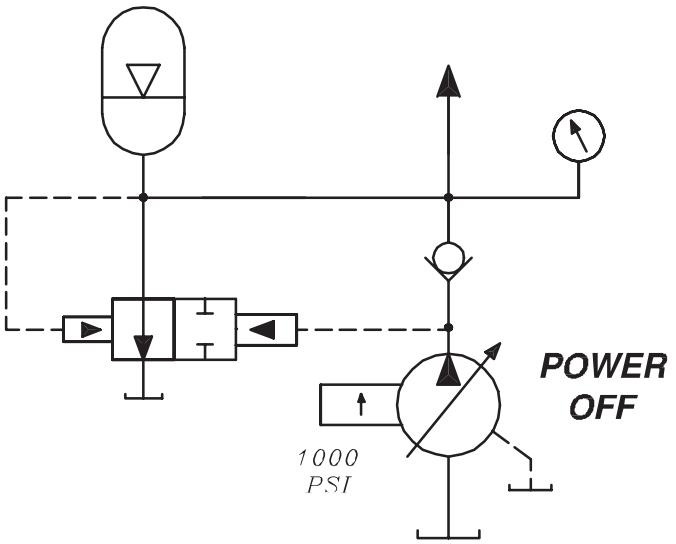

For example, if the larger area is 1 square inch, then the smaller area on the opposite end of the spool is ¼ or .25 square inches. When the pump is turned on, the same pressure will be exerted on both sides of the spool. The valve is not usually large enough to dump the total pump volume back to tank. For this reason the pressure builds up.

With the same pressure (1000 PSI) on both sides of the valve spool, the valve shifts closed because more force is exerted on the larger end of the spool.

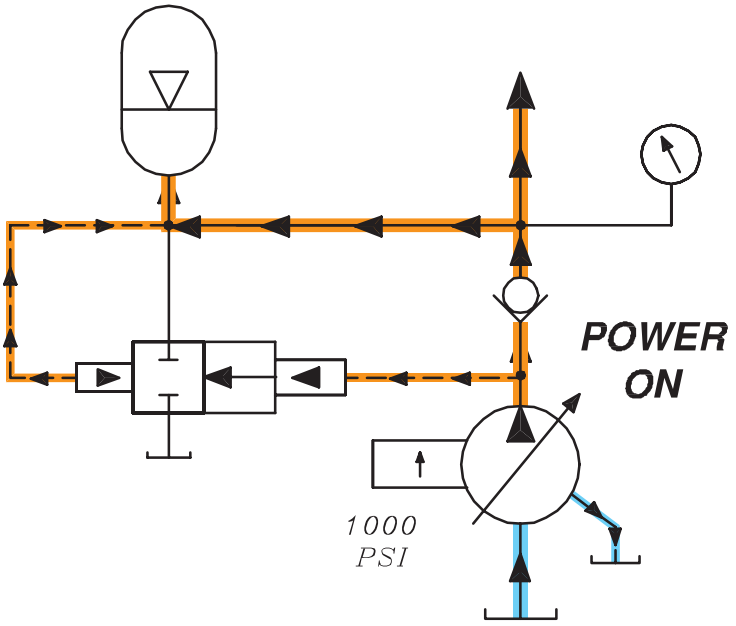

Force to Shift Closed = PSI x Area

Force to Shift Closed = 1000 PSI x 1 square inch

Force to Shift Closed = 1000 lbs force

Force on Opposite End = 1000 PSI x .25 square inches

Force on Opposite End = 250 lbs force

When the pump is turned off, the valve shifts back into the open position shown in the Power Off condition. The oil in the accumulator then returns back to tank.

Accumulator Safety

The accumulator is the most dangerous hydraulic component in the system, simply because it is a source of stored energy. Several safety procedures should be followed when working with accumulators. Follow all ZES lock out.

- LOCK OUT the pump, Then make sure the pressure is bled down out of the hydraulic system and accumulator before working on or around the machine.
- Watch the pressure gauge when the system is turned off. If an automatic dump valve is used, then the pressure should gradually drop to 0 PSI. If the pressure is not bled down, locate the manual dump valve. Open the valve and recheck the pressure. If it is bled down, LOCK the valve into the open position. In a quiet area, you can hear the pressurized fluid returning to tank through the valve.

- Release the nitrogen pressure with a charging rig before removing the accumulator from the system. If the protective cap cannot be removed, do not cut it off with a torch. The compressed nitrogen can be released violently, causing possible hearing and other physical damage.

- Always pre-charge the accumulator once installed on the machine. NEVER pre-charge an accumulator in the shop and carry it into the plant. NEVER pre-charge with nitrogen pressure above the maximum pressure of the accumulator. The maximum pressure is stamped on the outer housing of the accumulator.

- Make sure accumulators are properly clamped.